THIS DRAWING IS UNPUBLISHED. RELEASED FOR PUBLICATION -,- .
© COPYRIGHT - By - ALL RIGHTS RESERVED.

LOC	DIST
FT	0

REVISIONS

P	LTR	DESCRIPTION	DATE	DWN	APVD
	P	REVISED PER ECO-11-004820	11MAR11	RK	HMR

MATERIAL:
HOUSING: POLYAMIDE 6, UL94V-2.
COLOR: NATURAL (OFF WHITE).
TUBULAR CONTACT: BRASS, TIN PLATED.
SCREW: M3, STEEL, ZINC PLATED W/ NON-HEXAVALENT CHROMATE (CHROME III).
WIRE PROTECTION: STAINLESS STEEL.

ELECTRICAL:
CURRENT RATING: 30A, 250V, 10-22 AWG.
CURRENT RATING: 25A, 250V, 12-24 AWG.
WIRE RANGE: 10-24.

ENVIRONMENTAL:
CONTINUOUS WORKING TEMP.: -35°C TO +100°C.

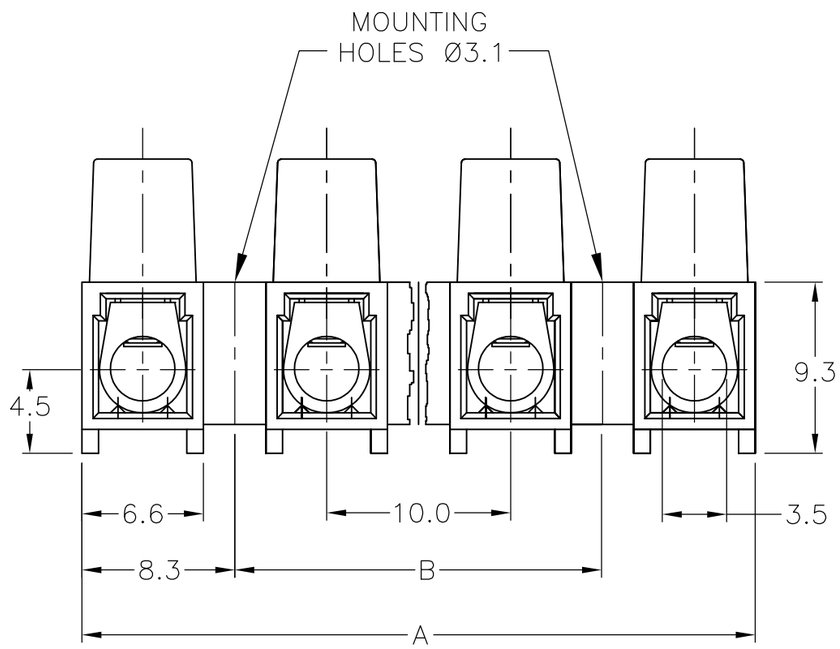

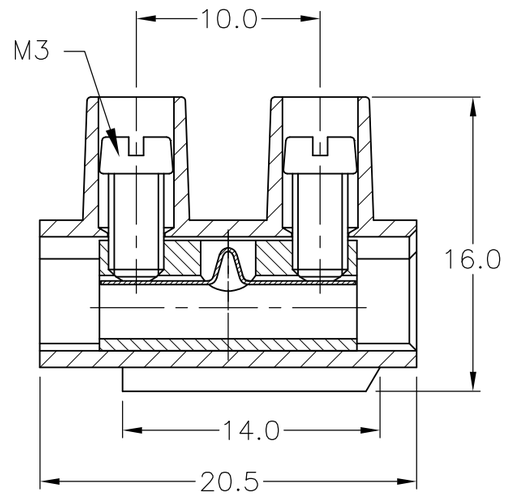

DIM B	DIM A	T & B PART NUMBER	PART NUMBER
100	116.6	TSB500 1231DS	1-1776296-2
90	106.6	TSB500 1131DS	1-1776296-1
80	96.6	TSB500 1031DS	1-1776296-0
70	86.6	TSB500 0931DS	1776296-9
60	76.6	TSB500 0831DS	1776296-8
50	66.6	TSB500 0731DS	1776296-7
40	56.6	TSB500 0631DS	1776296-6
30	46.6	TSB500 0531DS	1776296-5
20	36.6	TSB500 0431DS	1776296-4
10	26.6	TSB500 0331DS	1776296-3
-	16.6	TSB500 0213DS	1776296-2
-	6.6	TSB500 0131DS	1776296-1

THIS DRAWING IS A CONTROLLED DOCUMENT.

DIMENSIONS: mm

TOLERANCES UNLESS OTHERWISE SPECIFIED:
0 PLC ± -
1 PLC ± .3
2 PLC ± .25
3 PLC ± -
4 PLC ± -
ANGLES ± 2

MATERIAL -
FINISH -

DWN S SCHLEGEL 3/18/05
CHK C RICHARD 3/18/05
APVD C RICHARD 3/18/05
PRODUCT SPEC —
APPLICATION SPEC —
WEIGHT —

TE Connectivity

NAME
EUROPA TERMINAL BLOCK W/WIRE PROTECTOR
MOUNTING HOLES DIA 3.1, 10mm PITCH

SIZE	CAGE CODE	DRAWING NO	RESTRICTED TO
A3	00779	C-1776296	—

CUSTOMER DRAWING

SCALE	SHEET	REV
NTS	1 OF 1	P