REV.	MODIFICATION.	DATE	DRN
01	ECN2007-242	19/12/07	SF

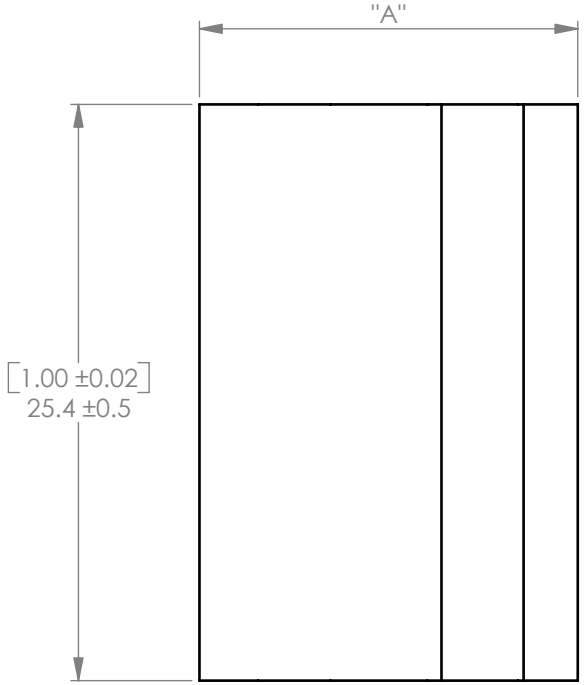

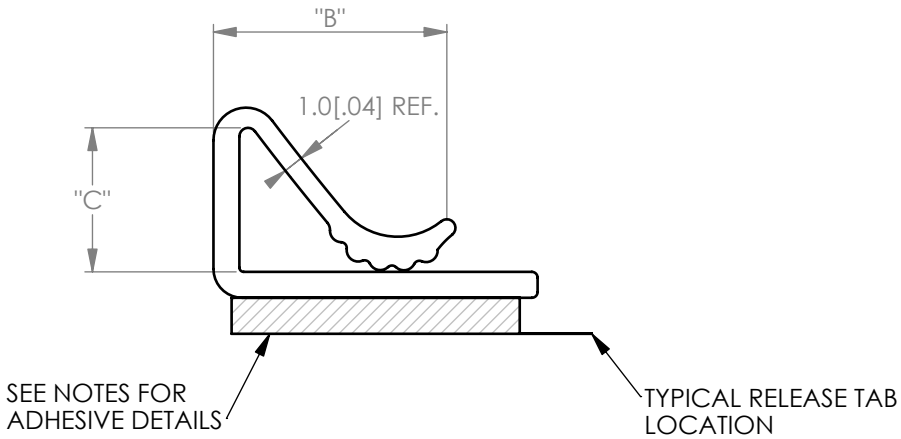

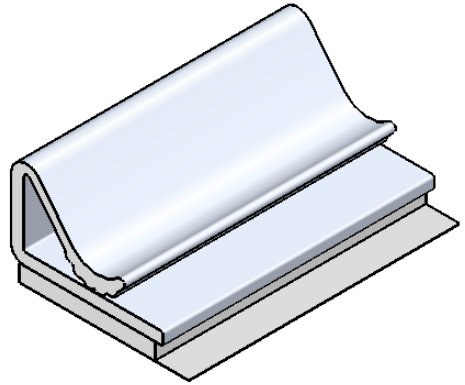

NOTES:
1. ACRYLIC ADHESIVE, YELLOW PE FILM LINER, WHITE PE FOAM (RMS-324).
2. DOUBLE SIDED ADHESIVE TAPE 0.8[1/32] THICK FOR -3. 1.6[1/16] THICK FOR -4 & -8.
3. CUSTOM LENGTHS AVAILABLE BY SPECIAL ORDER.
4. PARTS AVAILABLE WITHOUT TAPE BY SPECIAL ORDER. TO ORDER REMOVE SUFFIX "-A4-RT" FROM THE PART NUMBER.

PART NO.	"A"±0.4[.020]	"B" REF.	"C" REF.	MATERIAL COLOUR
CFCC-3-05A4-RT	14.3[9/16]	12.4[.49]	4.6[.18]	NORYL,RMS-05 (WHITE)
CFCC-4-05A-RT	14.3[9/19]	10.2[.40]	6.4[.25]	
CFCC-8-05A4-RT	27.0[1-1/16]	22.3[.88]	6.4[.25]	
CFCC-8-04A4-RT	27.0[1-1/16]	22.3[.88]	6.4[.25]	RIGID PVC, RMS-04 (GREY)
CFCC-4-04A4-RT	14.3[9/16]	10.2[.40]	6.4[.25]	

INFORMATION CONTAINED IN THIS DOCUMENT IS CONFIDENTIAL TO RICHCO INTERNATIONAL Co. Ltd. AND MAY NOT BE DISCLOSED OR REPRODUCED IN WHOLE OR PART WITHOUT THEIR WRITTEN CONSENT.

Richco®

ALL DIMENSIONS IN mm[in]
GENERAL TOLERANCES ±0.25
UNLESS OTHERWISE STATED
1 DECIMAL PLACE ±0.25
2 DECIMAL PLACES ± 0.10
ANGULAR ±1°

THIRD ANGLE

MATERIAL: SEE TABLE				COLOUR: SEE TABLE	
DESCRIPTION: CONTINUOUS FLAT CABLE CLAMP				PART No: SEE TABLE	
DRG No: 07-147		NPR No: N/A		Mass:(g) 0.9	SHEET SIZE A4
DRN SF	DATE 19/12/07	CHKD NBr	DATE 19/12/07	SCALE NTS	SHEET No. 1 OF 1

FORM No. 0145/02