C1608JB1C474K080AA

TDK Item Description : C1608JB1C474KT****

Lead Free | Halogen Free | REACH | RoHS COMPLIANT

Application & Main Feature

Commercial Grade (General (Up to 50V))

Series

C1608 [EIA CC0603]

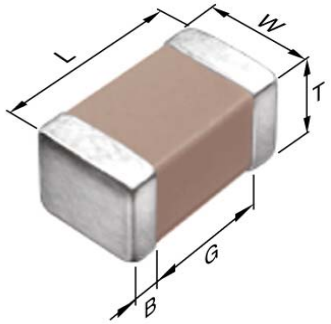

Dimensions

L	1.60mm +/-0.1mm
W	0.80mm +/-0.1mm
T	0.80mm +/-0.1mm
B	0.20mm Min.
G	0.30mm Min.

Temperature Characteristic

JB (-25 to 85 degC +/-10%)

Rated Voltage

1C (16Vdc)

Capacitance

470nF

Capacitance Tolerance

K (+/-10%)

Dissipation Factor

5% Max.

Insulation Resitance

212Mohm Min.

AEC-Q200

Not Applicable

DC Bias Characteristic

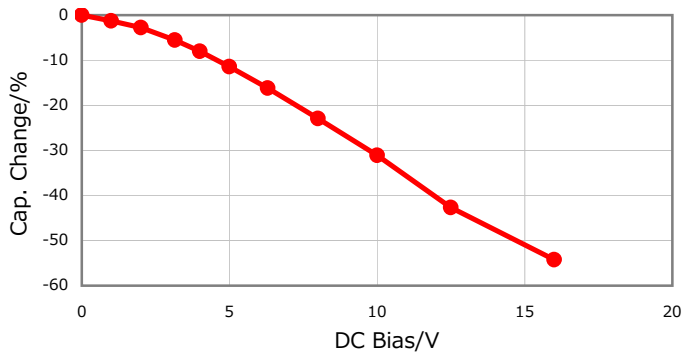

|Z|, ESR vs. Freq. Characteristics

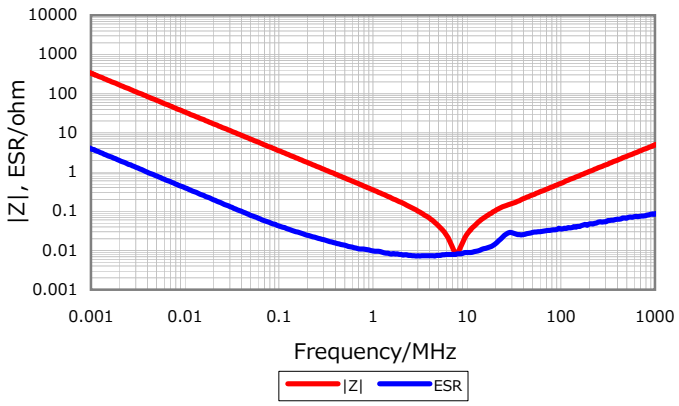

Temperature Characteristic

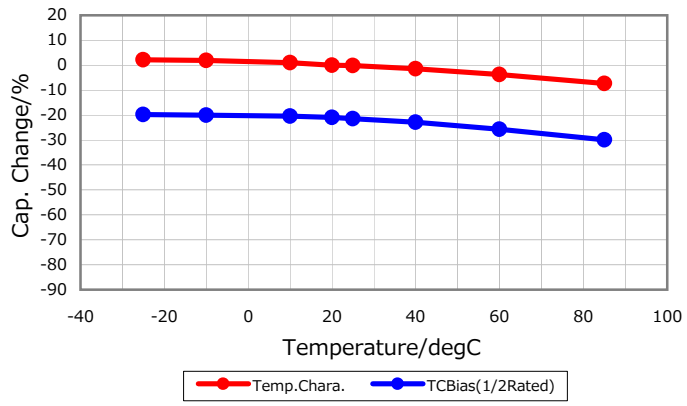

Cap. vs. Freq. Characteristic

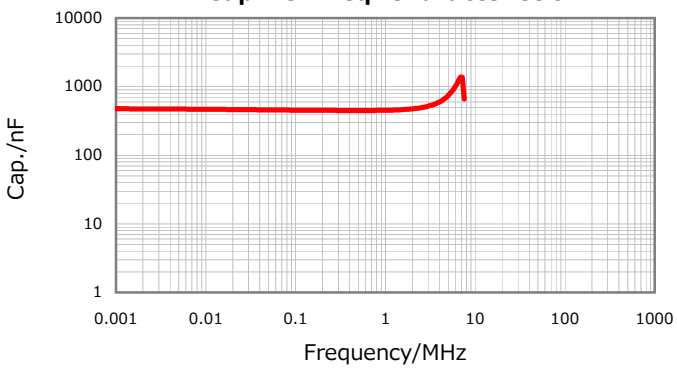

Ripple Temperature Rise Characteristic

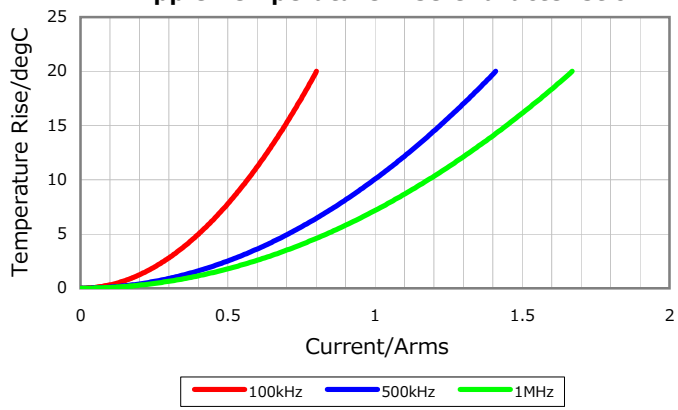

Characterization Sheet (Multilayer Ceramic Chip Capacitors)

TDK

All specifications are subject to change without notice.

September 28, 2013