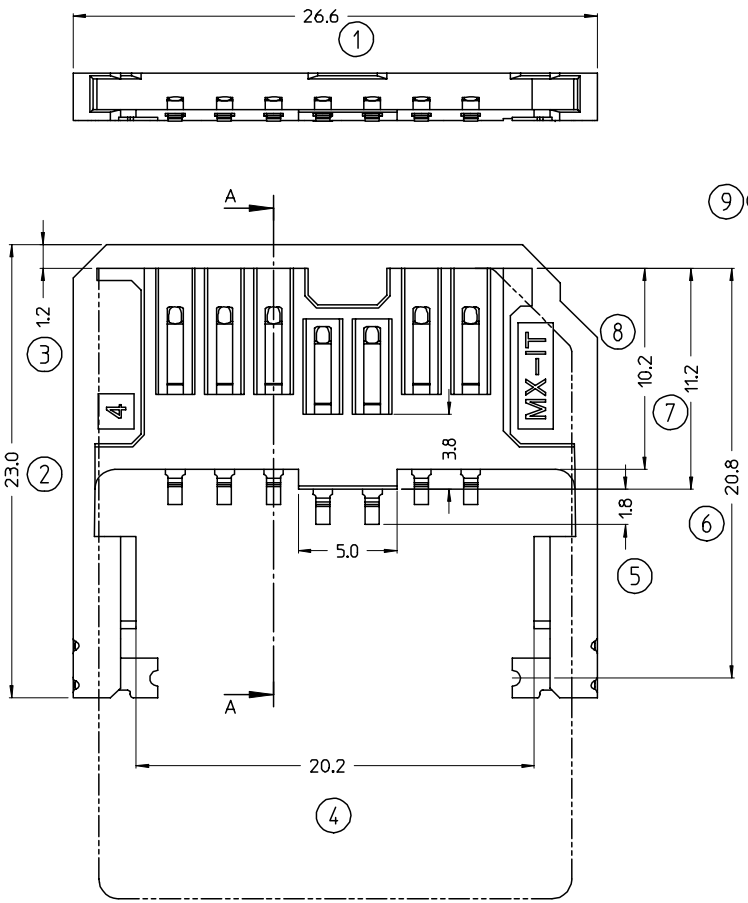

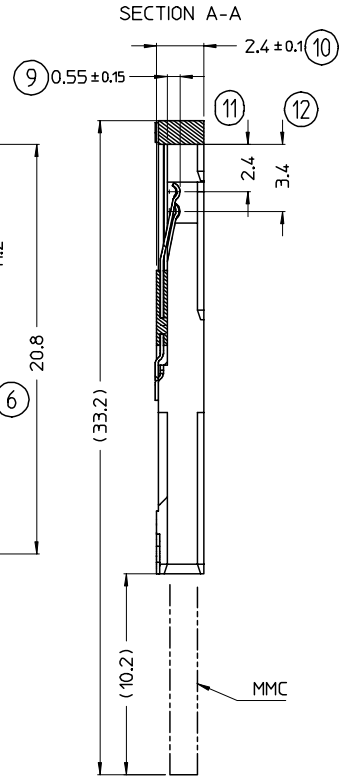

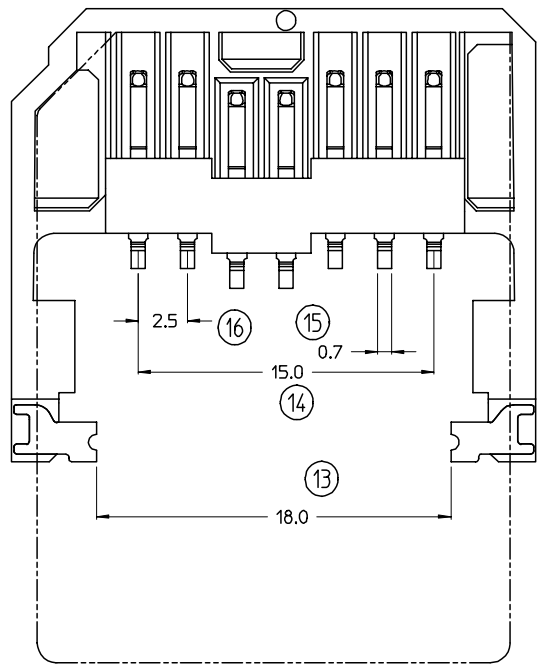

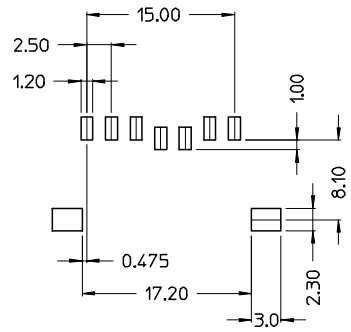

RECOMMENDED PCB LAYOUT
(COMPONENT SIDE)
SCALE 2:1

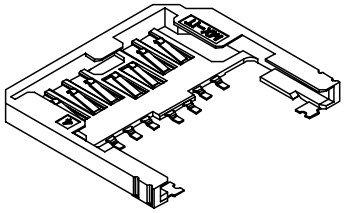

NOTE
1. MATERIAL
HOUSING: LCP, UL94 V0, BLACK COLOR
TERMINAL: Ph-Bz Cu Sn8 0.15 THICK
2. PLATING
CONTACT AREA : Au 0.76um MIN OVER Ni 1.27um MIN
SOLDER AREA: PURE Sn 3.8um MIN OVER Ni 1.27um MIN
3. PACKAGING: TAPE & REEL SEE DRAWING T.B.D.
4. OTHER PRODUCT CHARACTERISTIC ACCORDING
PRODUCT SPECIFICATION PS-94352-001

STD. DESCR."MMC CONNECTOR, SMT"

EC NO: Z2006-0095	QUALITY SYMBOLS	GENERAL TOLERANCES (UNLESS SPECIFIED)			SCALE 2:1	DESIGN UNITS METRIC	FIRST ANGLE PROJECTION	REVISE ON CAD ONLY	
DRWN: GZUIN 2005/12/05			mm	INCH	DIMENSION STYLE MM ONLY		TITLE MULTI MEDIA CARD CONN. ASS'Y		
CHKD: 2005/12/05	▼ - 0	4 PLACES	± ---	± ---	DRAWN BY GZUIN	DATE 02/11/08			
APPR: FBISELLO 2005/12/07		3 PLACES	± ---	± ---					
DESCRIPTION		2 PLACES	± 0.10	± ---	CHECKED BY MTESTAGU	DATE 02/11/08	molex MOLEX INCORPORATED		
	⌓ - 0	1 PLACE	± 0.2	± ---					
		ANGULAR ± 2 °			APPROVED BY RMARTUCC	DATE 02/11/08	MATERIAL NO. 94352-5007	DOCUMENT NO. SD-94352-001	SHEET NO. 1 OF 1
REV A		DRAFT WHERE APPLICABLE MUST REMAIN WITHIN DIMENSIONS			THIS DRAWING CONTAINS INFORMATION THAT IS PROPRIETARY TO MOLEX INCORPORATED AND SHOULD NOT BE USED WITHOUT WRITTEN PERMISSION				A3