REV.	DATE	DESCRIPTION
NC	06/20/03	INITIAL RELEASE

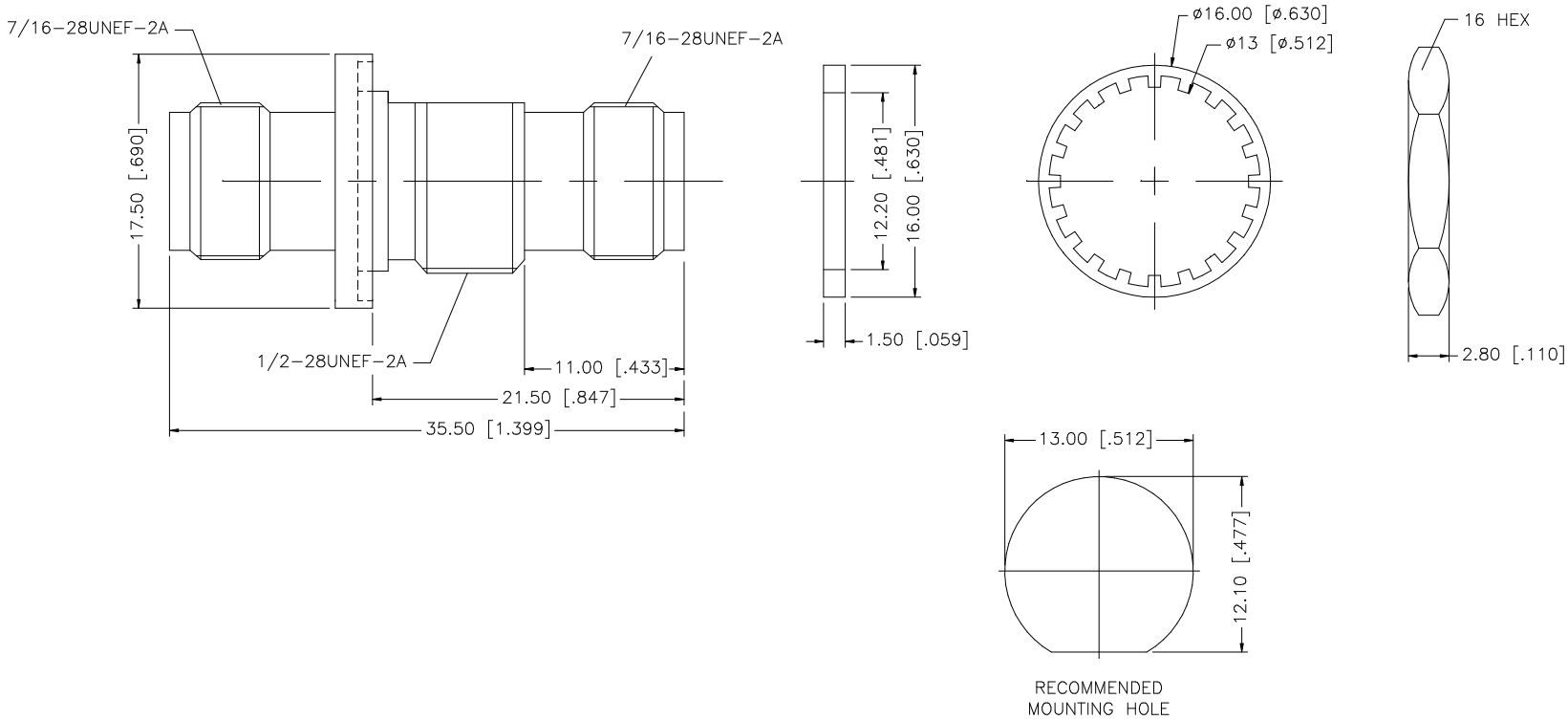

	DESCRIPTION	MATERIAL	FINISH	QTY
9				
8				
7				
6	HEX NUT	BRASS	NICKEL	1
5	LOCK WASHER	BRASS	NICKEL	1
4	GASKET	RUBBER	RED	1
3	CONTACT PIN	PHOS. BRONZE	GOLD	1
2	INSULATOR	DELRIN	NATURAL	1
1	BODY	BRASS	NICKEL	1

UNLESS OTHERWISE SPECIFIED DIMENSIONS ARE IN MILLIMETERS. DIMENSIONS IN [ ] ARE IN INCHES AND FOR CUSTOMER REFERANCE ONLY.

UNLESS OTHERWISE SPECIFIED TOLERANCES FOR MILLIMETERS ARE:
0.5 – 8mm ± 0.20mm
8 – 30mm ± 0.40mm
30 – 120mm ± 0.50mm

UNLESS OTHERWISE SPECIFIED TOLERANCES FOR INCHES ARE:
.020 – .315 = ± 0.007"
.315 – 1.180 = ± 0.015"
1.180 – 4.724 = ± 0.020"

DO NOT SCALE DRAWING

APPROVALS		DATE
DRAWN	G.R.S.	06/20/03
CHECKED		
ISSUED		
SHEET	1 OF 1	
CAD FILE	C:/122/122342.DWG	

Amphenol Connex

PART DESCRIPTION
TNC FEMALE TO FEMALE BULKHEAD ADAPTOR

PART NO. 122342

DWG. NO.	REV.	SIZE	SCALE
122342.DWG	NC	A	NA