THIS DRAWING IS UNPUBLISHED. RELEASED FOR PUBLICATION - ,- .
© COPYRIGHT - By - ALL RIGHTS RESERVED.

REVISIONS

| P | LTR | DESCRIPTION | DATE | DWN | APVD |
|---|---|---|---|---|---|
| | H1 | REVISED PER ECO-16-004800 | 10SEP2016 | NK | MZ |
| | J | REVISED PER ECO-16-018356 | 22MAR2017 | RS | MZ |

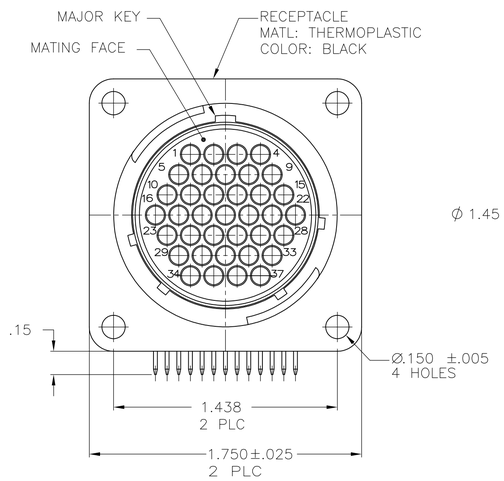


796406-1 & -11

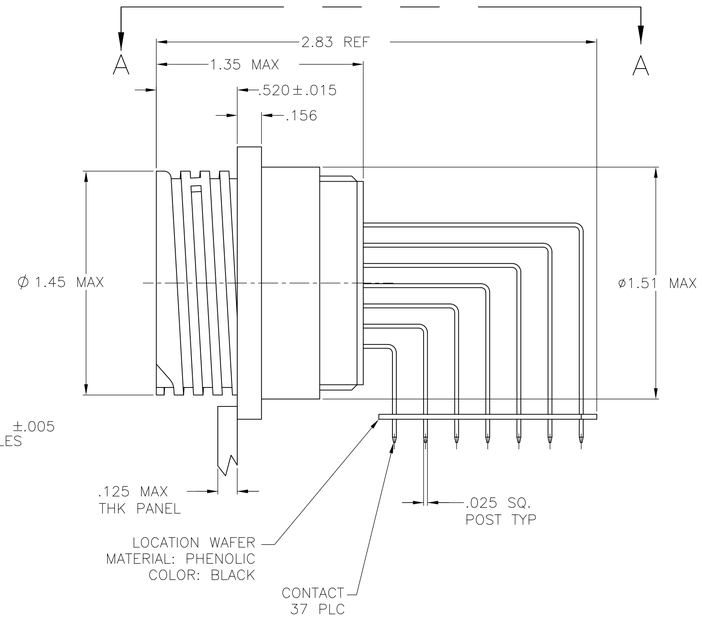


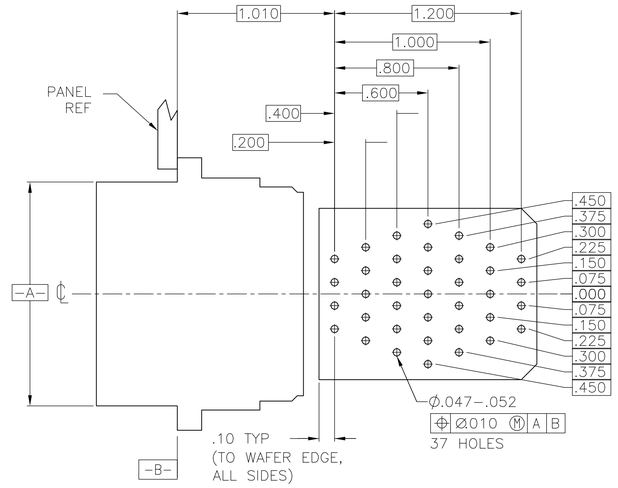


VIEW A-A 4
RECOMMENDED PC BOARD LAYOUT

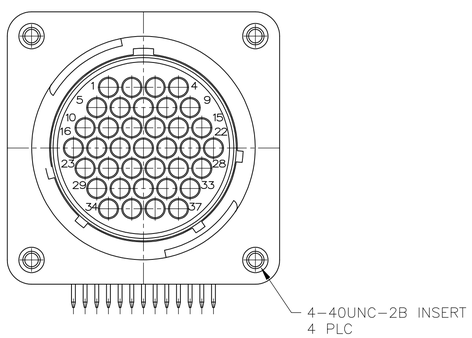


796406-2 & -12

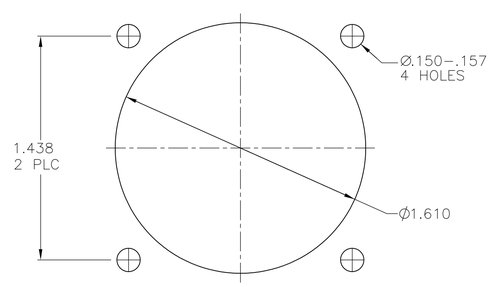


RECOMMENDED PANEL CUTOUT

1 CONTACT CAVITIES IDENTIFIED BY CHARACTERS ON FRONT AND REAR FACES OF CONNECTOR.

2 #6 FASTENER RECOMMENDED FOR MOUNTING.

3 CONTACT BODY: .000030 MIN GOLD FOR A LENGTH OF .250 MIN FROM MATING END, WITH REMAINDER TO BE GOLD FLASH, BOTH OVER .000050 MIN NICKEL.
CONTACT POST: .000100 MIN TIN-LEAD OVER .000050 MIN NICKEL

4 PC BOARD HOLE PATTERN IS DEFINED RELATIVE TO CONNECTOR C.L. AND PANEL MOUNTING FACE INDICATED.

5 CONTACT BODY: .000030 MIN GOLD FOR A LENGTH OF .250 MIN FROM MATING END, WITH REMAINDER TO BE GOLD FLASH, BOTH OVER .000050 MIN NICKEL.
CONTACT POST: .000100 MIN TIN OVER .000050 MIN NICKEL

6 CONTACT BODY: .000100 MIN TIN FOR A LENGTH OF .250 MIN FROM MATING END, OVER .000050 MIN NICKEL.
CONTACT POST: .000100 MIN TIN OVER .000050 MIN NICKEL

7 PIN POSITIONS 2, 6, 10, 17, 23, 29 & 34 VACANT

8 PIN POSITIONS 3, 8, 14, 21, 27 & 33 VACANT

| | CONTACT FINISH | PERIPHERAL SEAL | THREADED INSERT | PART NUMBER |
|---|---|---|---|---|
| | 5 | YES | YES | 1-796406-2 |
| | 5 | NO | NO | 1-796406-1 |
| OBSOLETE | 6 | YES | NO | 8 ~~796406-5~~ |
| | 6 | YES | NO | 7 796406-4 |
| OBSOLETE | 6 | NO | NO | ~~796406-3~~ |
| OBSOLETE | 3 | NO | YES | ~~796406-2~~ |
| | 3 | NO | NO | 796406-1 |

THIS DRAWING IS A CONTROLLED DOCUMENT.

DIMENSIONS: INCHES

TOLERANCES UNLESS OTHERWISE SPECIFIED:
0 PLC ± -
1 PLC ± -
2 PLC ± .03
3 PLC ± .010
4 PLC ± -
ANGLES ± 1°

MATERIAL -
FINISH -

DWN HAMNER 3-7-00
CHK M.CHACKO 3-9-00
APVD M.CHACKO 3-9-00
PRODUCT SPEC —
APPLICATION SPEC —
WEIGHT —

TE Connectivity

NAME RECEPTACLE ASSY, POSTED, RT ANGLE, STD SEX, SIZE 23-37, SERIES 1, CPC

| SIZE | CAGE CODE | DRAWING NO | RESTRICTED TO |
|---|---|---|---|
| A1 | 00779 | C-796406 | — |

CUSTOMER DRAWING SCALE 2:1 SHEET 1 OF 1 REV J

4805 (1/15)