Inductive sensors, 3-wire, cylindrical, metal

IFRM 06P17A3/S35L

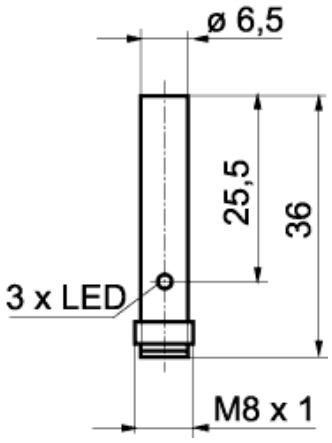

Technical Data	
sensing distance Sn	2 mm
output	PNP
output state	NO
mounting	shielded
housing style	cylindrical
size	06,5 mm
length	36 mm
housing material	stainless steel
connection	connector
voltage supply range +Vs	10 - 30 V
supply voltage	DC
supply current	< 12 mA
max. switching current	< 200 mA
voltage drop Vd	< 2 V
switching frequency	< 5000 Hz
switching hysteresis	3 - 20 % of Sr
output indicator	3 port LED red
short circuit protection	yes
reverse polarity protection	yes
temperature range	-25 ... +75 °C
sensing face material	PBT
protection class	IP 67
connector options	ESW 31, ESG 32

photo

circuit diagram

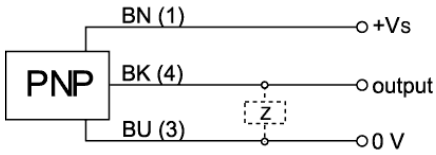

robust steel housings, high switching frequency