Extract from the online catalog

# MCV 1,5/10-G-3,5

Order No.: 1843680

The figure shows a 10-position version of the product

http://eshop.phoenixcontact.de/phoenix/treeViewClick.do?UID=1843680

Header, Nominal current: 8 A, Nom. voltage: 160 V, Pitch: 3.5 mm, Number of positions: 10, Color: green, Assembly: Soldering

| Commercial data | |
|---|---|
| EAN | 4017918112837 |
| Pack | 50 pcs. |
| Customs tariff | 85366990 |
| Weight/Piece | 0.002712 KG |
| Catalog page information | Page 175 (CC-2009) |

Product notes

WEEE/RoHS-compliant since: 01/01/2003

http://www.download.phoenixcontact.com Please note that the data given here has been taken from the online catalog. For comprehensive information and data, please refer to the user documentation. The General Terms and Conditions of Use apply to Internet downloads.

## Technical data

### Dimensions / positions

| | |
|---|---|
| Length | 7.25 mm |
| Pitch | 3.5 mm |
| Dimension a | 31.5 mm |
| Number of positions | 10 |
| Pin dimensions | 0,8 x 0,8 mm |

| | |
|---|---|
| Hole diameter | 1.2 mm |

**Technical data**

| | |
|---|---|
| Insulating material group | IIIa |
| Rated surge voltage (III/3) | 2.5 kV |
| Rated surge voltage (III/2) | 2.5 kV |
| Rated surge voltage (II/2) | 2.5 kV |
| Rated voltage (III/2) | 160 V |
| Rated voltage (II/2) | 250 V |
| Connection in acc. with standard | EN-VDE |
| Nominal current $I_N$ | 8 A |
| Nominal voltage $U_N$ | 160 V |
| Maximum load current | 8 A |
| Insulating material | PBT |
| Inflammability class acc. to UL 94 | V0 |

## Certificates / Approvals

| | |
|---|---|
| Certification | CB, CSA, CUL, GOST, UL, VDE-PZI |

**CSA**

| | |
|---|---|
| Nominal voltage $U_N$ | 300 V |
| Nominal current $I_N$ | 8 A |

**CUL**

| | |
|---|---|
| Nominal voltage $U_N$ | 300 V |
| Nominal current $I_N$ | 8 A |

**UL**

| | |
|---|---|
| Nominal voltage $U_N$ | 300 V |
| Nominal current $I_N$ | 8 A |

## Accessories

| Item | Designation | Description |
|---|---|---|
| **Marking** | | |
| 1051993 | B-STIFT | Marker pen, for manual labeling of unprinted Zack strips, smear-proof and waterproof, line thickness 0.5 mm |
| 0804073 | SK 3,5/2,8:FORTL.ZAHLEN | Marker card, printed horizontally, self-adhesive, 10-section marker strip, 14 identical decades marked 1-10, 11-20 etc. up to 91-100, sufficient for 140 terminal blocks |
| 0803883 | SK U/2,8 WH:UNBEDRUCKT | Unprinted marker cards, DIN A4 format, pitch as desired, self-adhesive, with 50 stamped marker strips, 185 mm strip length, can be labeled with the CMS system or manually with the M-PEN |
| **Plug/Adapter** | | |
| 1734634 | CP-MSTB | Keying profile, is inserted into the slot on the plug or inverted header, red insulating material |

## Diagrams/Drawings

Drilling plan/solder pad geometry

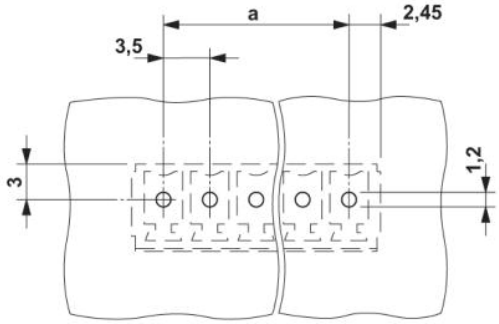


Dimensioned drawing

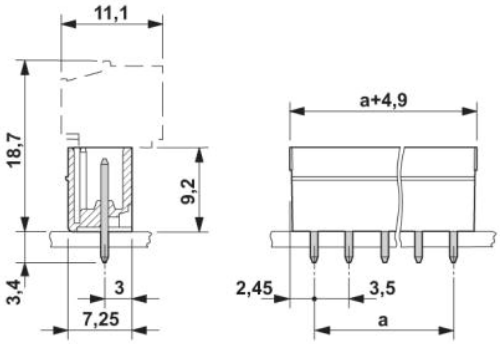

## Address

PHOENIX CONTACT Inc., USA
586 Fulling Mill Road
Middletown, PA 17057,USA
Phone (800) 888-7388
Fax (717) 944-1625
http://www.phoenixcon.com

© 2010 Phoenix Contact
Technical modifications reserved;