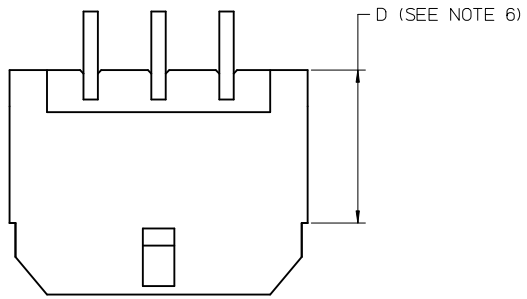

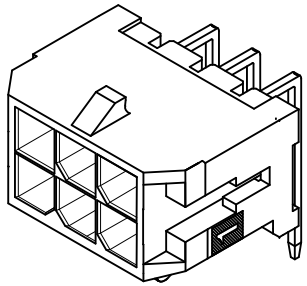

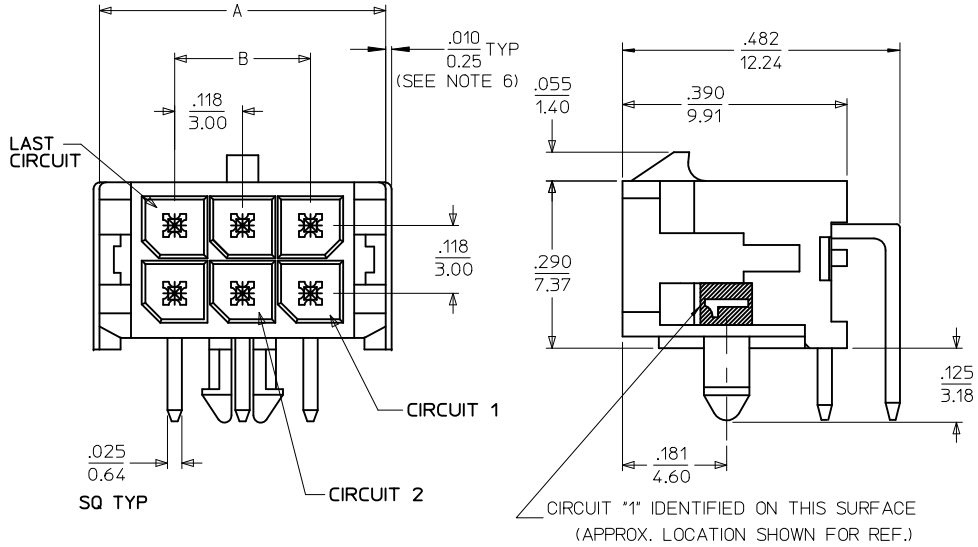

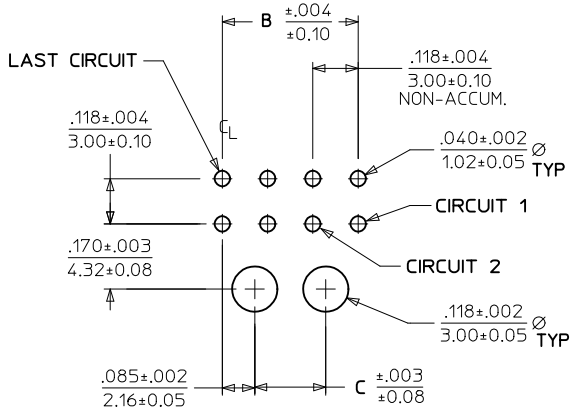

PCB LAYOUT: COMPONENT SIDE
RECOMMEND PCB THICKNESS: .062/1.57

CKTS	A	B	C
02	.262 / 6.65	NA	NA
04	.380 / 9.65	.118 / 3.00	NA
06	.498 / 12.65	.236 / 6.00	NA
08	.616 / 15.65	.354 / 9.00	.185 / 4.70
10	.734 / 18.65	.472 / 12.00	.303 / 7.70
12	.852 / 21.65	.591 / 15.00	.421 / 10.70
14	.970 / 24.65	.709 / 18.00	.539 / 13.70
16	1.088 / 27.65	.827 / 21.00	.657 / 16.70
18	1.206 / 30.65	.945 / 24.00	.776 / 19.70
20	1.325 / 33.65	1.063 / 27.00	.894 / 22.70
22	1.443 / 36.65	1.181 / 30.00	1.012 / 25.70
24	1.561 / 39.65	1.299 / 33.00	1.130 / 28.70

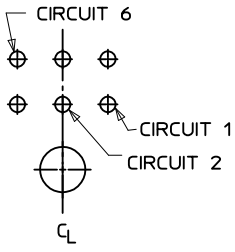

PCB LAYOUT:
6 CKT HEADER

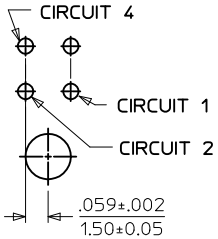

PCB LAYOUT:
4 CKT HEADER

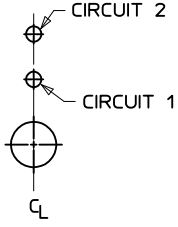

PCB LAYOUT:
2 CKT HEADER

	FINISH A	FINISH B	FINISH C
CKTS	MATERIAL NO:	MATERIAL NO:	MATERIAL NO:
02	43045-0200	43045-0201	43045-0202
04	43045-0400	43045-0401	43045-0402
06	43045-0600	43045-0601	43045-0602
08	43045-0800	43045-0801	43045-0802
10	43045-1000	43045-1001	43045-1002
12	43045-1200	43045-1201	43045-1202
14	43045-1400	43045-1401	43045-1402
16	43045-1600	43045-1601	43045-1602
18	43045-1800	43045-1801	43045-1802
20	43045-2000	43045-2001	43045-2002
22	43045-2200	43045-2201	43045-2202
24	43045-2400	43045-2401	43045-2402

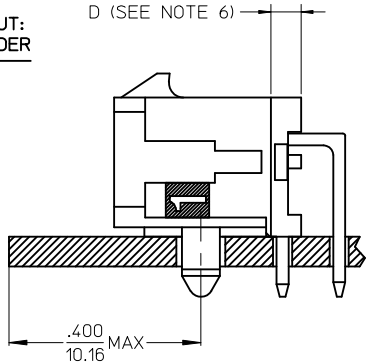

LOCATION DETAIL
SEE NOTE #7

NOTES:

1. HOUSING MATERIAL: GLASS FILLED LIQUID CRYSTAL POLYMER, UL94V-0, COLOR: BLACK
   TERMINAL MATERIAL: BRASS ALLOY
2. FINISH: A = .000100/(0.00254) MIN. TIN OVER
   .000050/(0.00127) MIN. NICKEL PLATE.
   B = .000015/(0.00038) MIN. SELECT GOLD IN CONTACT AREA,
   .000100/(0.00254) MIN. SELECT MATTE TIN ON SOLDER TAILS,
   BOTH OVER .000050/(0.00127) MIN. NICKEL PLATE.
   C = .000030/(0.00076) MIN. SELECT GOLD IN CONTACT AREA,
   .000100/(0.00254) MIN. SELECT MATTE TIN ON SOLDER TAILS,
   BOTH OVER .000050/(0.00127) MIN. NICKEL PLATE.
3. PRODUCT SPECIFICATION: PS-43045
4. TRAY PACKAGED : SEE MOLEX DRAWING PK-70873-0313
5. MATES WITH MICRO FIT (3.0) RECEPTACLE SERIES 43025
6. CIRCUIT SIZES 2-6: "D" IS .265/6.74 FOR .010/0.25 STEP.
   CIRCUIT SIZES 8-24: "D" IS .063/1.60 FOR .010/0.25 STEP.
7. TO AVOID INTERFERENCE BETWEEN RECEPTACLE AND PCB, HEADER MUST BE PLACED WITHIN .400/(10.16) MAX. FROM EDGE OF PCB, AS SHOWN IN LOCATION DETAIL.
8. THIS PART CONFORMS TO CLASS B REQUIREMENTS OF PRODUCT SPECIFICATION PS-45499-002.

REV	DESCRIPTION	
T	ADD "D" DIM EC NO: UCP2011-0508	2010/08/24
	DRWN:GMARANANI	2010/08/24
	CHKD:SSOUSEK	2010/12/23
	APPR:FSMITH	

QUALITY SYMBOLS
F =0
E =0
P =0

GENERAL TOLERANCES (UNLESS SPECIFIED)	mm	INCH
4 PLACES	± ---	± ---
3 PLACES	± ---	± .010
2 PLACES	± 0.25	± .014
1 PLACE	± 0.36	± ---
ANGULAR ±1/2°		

DRAFT WHERE APPLICABLE MUST REMAIN WITHIN DIMENSIONS

DIMENSION STYLE: IN/MM
SCALE: ---
DESIGN UNITS: METRIC
THIRD ANGLE PROJECTION

DRAWN BY: SAMIEC	DATE: 2000/03/15	TITLE: MICRO-FIT (3.0) DUAL ROW RIGHT ANGLE THRU HOLE HEADER ASS'Y
CHECKED BY: MUELLER	DATE: 2000/03/15	
APPROVED BY: EDGLEY	DATE: 2000/03/15	molex MOLEX INCORPORATED
MATERIAL NO.: SEE CHART		DOCUMENT NO.: SD-43045-001 — SHEET NO.: 1 OF 1

SIZE: C

THIS DRAWING CONTAINS INFORMATION THAT IS PROPRIETARY TO MOLEX INCORPORATED AND SHOULD NOT BE USED WITHOUT WRITTEN PERMISSION