CASE FINISH	CURRENT (AMPS)	WORKING VOLTAGE				MAXIMUM DC RESISTANCE (OHMS)	MAXIMUM VOLTAGE DROP		MINIMUM CAPACITANCE (uF)	MIN. INSERTION LOSS PER MIL-STD-220, FULL LOAD, +25°C												
		-55°C TO +85°C		-55°C TO +125°C			DC	AC		14 KHz	30 KHz	50 KHz	75 KHz	100 KHz	150 KHz	300 KHz	500 KHz	1 MHz	10 MHz	100 MHz	1 GHz	10 GHz
		AC	DC	AC	DC																	
SOLDER	15	--	80	--	50	0.005	--	--	--	--	15	--	--	--	28	34	--	44	60	70	70	--

PART MARKING:
SCI
9051-100-0000
DATE CODE

PACKAGE MARKING:

BUBBLE PACK
50 PCS.
DATE CODE ON PACKAGE LABEL SHOULD BE THE SAME AS THE DATE CODE ON PART MARKING.

09

MARKING NOTES:

N/A

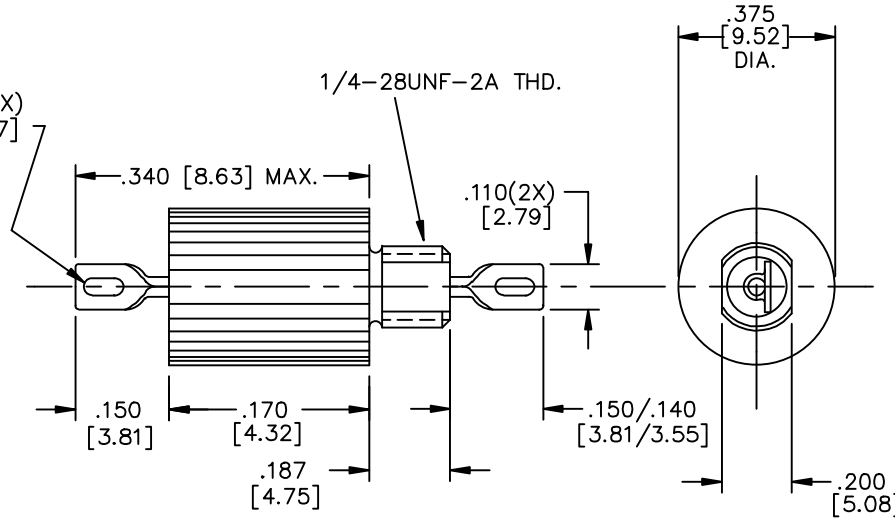

SCHEMATIC

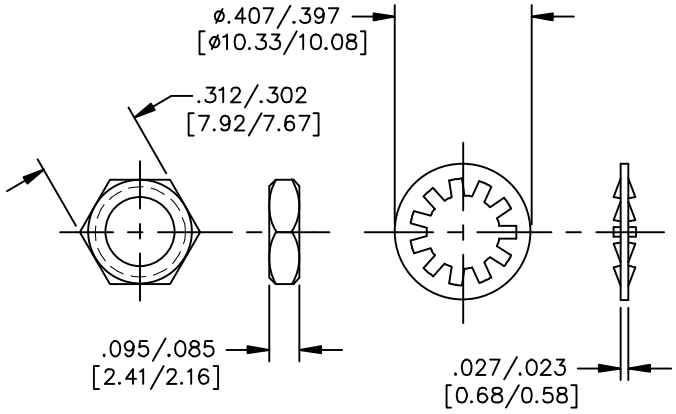

MTG. HARDWARE

NOTES:
1) MOUNTING TORQUE NOT TO EXCEED 7in-lbs.

REV. NO.	
9	CN 53342-ENG
8	CN 45605-ENG
7	CN 31993-CPD
6	CN 214090
5	CN 206911
4	CN 183679

CHANGE NOTICE

UNLESS OTHERWISE SPECIFIED DIMENSIONS ARE IN INCHES. [MILLIMETERS]
DO NOT SCALE.

TOLERANCES UNLESS OTHERWISE SPECIFIED
Fractions ±
Dec. .xx±
Dec. .xxx± .010
Angles ±0° 30'
CODE IDENT. NO. OLSP2

SPECTRUM CONTROL INC.
FAIRVIEW PENNSYLVANIA

Dwn. MAYNARD
Date 3-01-10
Engr. S.PETERS
Sheet 1 of 1

Description Low Pass EMI Filter

9051-100-0000

Quality Products From The Specialists In Electro-Magnetic Compatibility