THIS DRAWING IS UNPUBLISHED. RELEASED FOR PUBLICATION -,- .
© COPYRIGHT - By - ALL RIGHTS RESERVED.

LOC	DIST
AF	50

REVISIONS

P	LTR	DESCRIPTION	DATE	DWN	APVD
	P	REVISED PER ECR-13-004343	30JUL13	KH	KR

1 MATES WITH .020±.001x.187 TAB

2 WIRE STRIP LENGTH .281

3 INSULATION SIZE .260 MAX DIA

4 CONTINUOUS STRIP ON REELS

5 DIMENSION DOES NOT INCLUDE TRIM BURR

6 .015 MAX CARRIER TRIM BURR PER SIDE IS ALLOWABLE IN THE SHADED AREA

7 PRELIMINARY – NOT FOR PRODUCTION

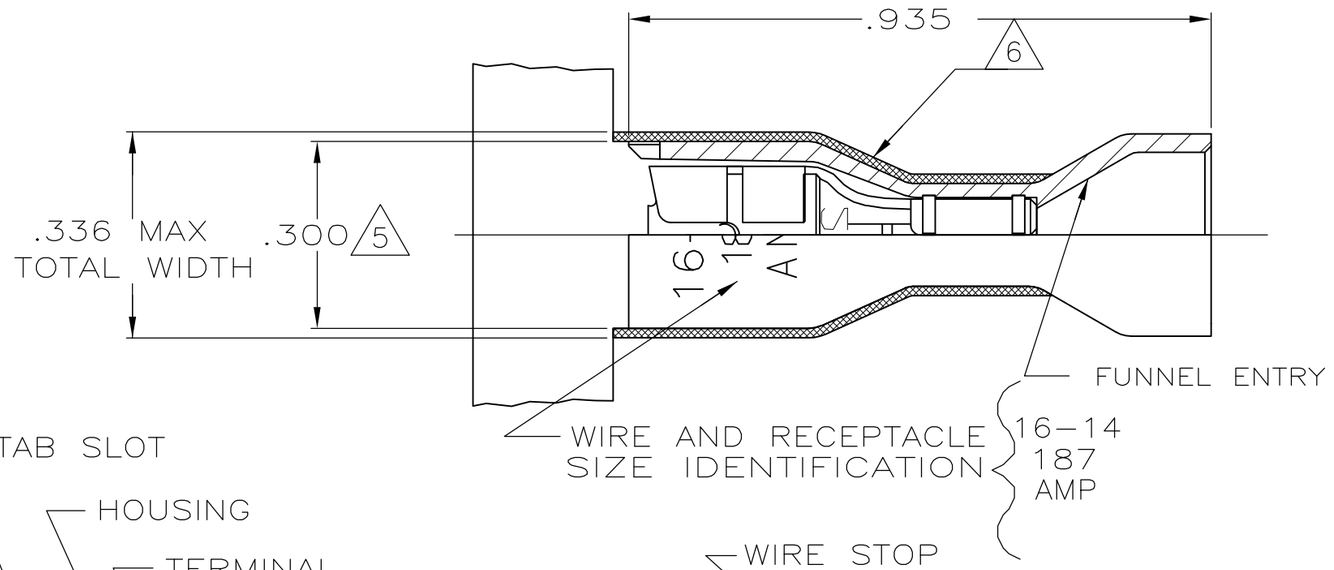

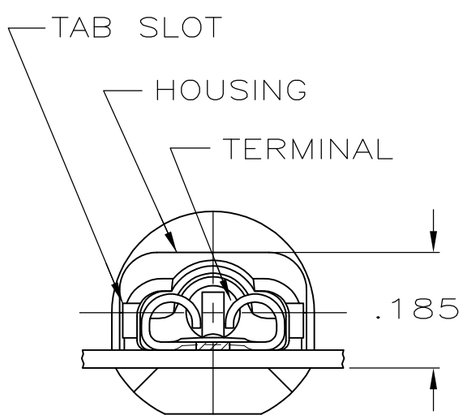

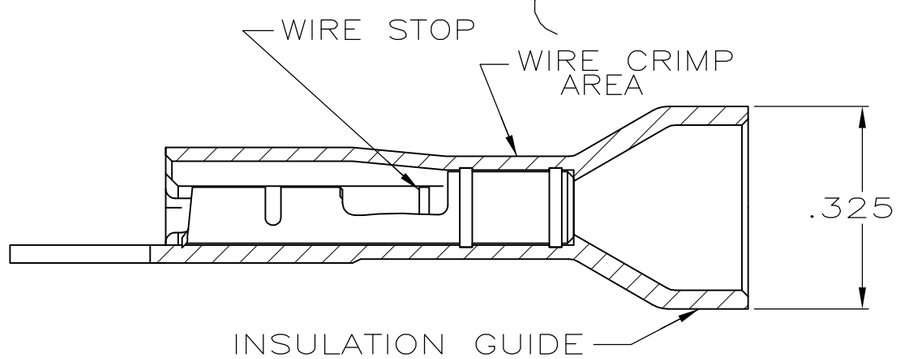

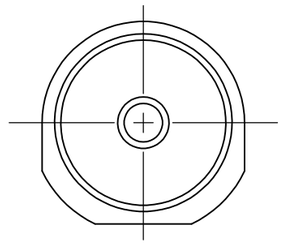

STANDARD	HOUSING:NYLON,COLOR-GRAY TRANSLUCENT RECEPTACLE:BRASS TIN	7 6-520150-2
BULK	HOUSING:NYLON,COLOR-BLUE TRANSLUCENT RECEPTACLE:BRASS TIN	5-520150-2
STANDARD		3-520150-2
PACKAGING	MATERIAL & FINISH	PART NO

THIS DRAWING IS A CONTROLLED DOCUMENT.

DIMENSIONS: INCHES

TOLERANCES UNLESS OTHERWISE SPECIFIED:

0 PLC	± -
1 PLC	± -
2 PLC	± -
3 PLC	± .015
4 PLC	± -
ANGLES	± -

MATERIAL: SEE TABLE

FINISH: SEE TABLE

DWN	P FORTNEY	9/28/88
CHK	MS FEHER	9/28/88
APVD	K RANDOLPH	9/28/88
PRODUCT SPEC	108-2043	
APPLICATION SPEC	114-2123	
WEIGHT	-	

TE Connectivity

NAME: RECEPTACLE ASSY,ULTRA-FAST, .187 SERIES,16-14 AWG

SIZE	CAGE CODE	DRAWING NO	RESTRICTED TO
A3	00779	C-520150	-

CUSTOMER DRAWING | SCALE 4:1 | SHEET 1 OF 1 | REV P

1470-19 (3/11)