Alle Rechte vorbehalten/ *All rights reserved*

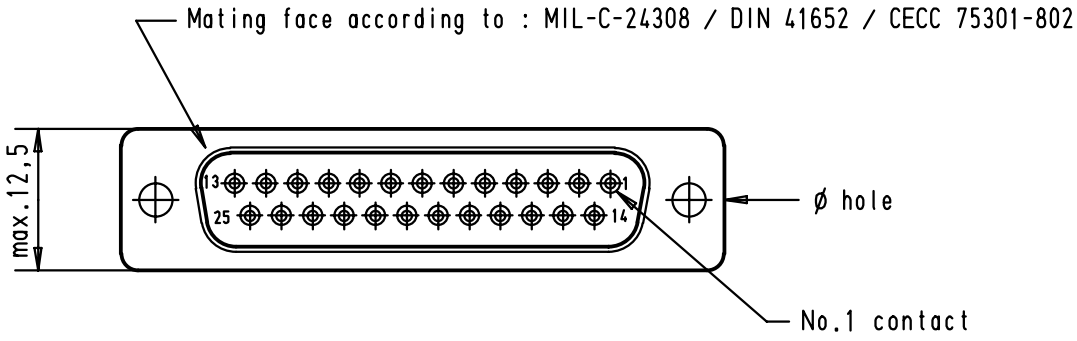

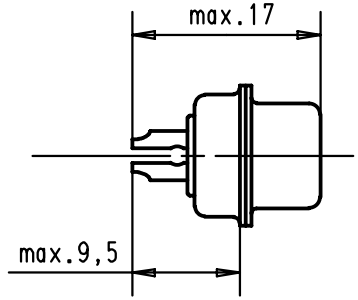

Max wire ø 1,05 mm

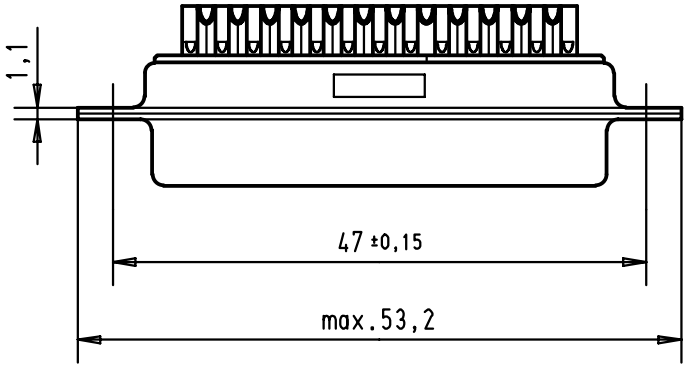

							Dat.	Name		D-Sub, Female, Straight 25 Poles with stamped solder buckets and hole	Maßstab/ *Scale*
						Detail.	24-APR-02	CV			1.5:1
09 67 225 4715.05	$3.1^{+0,1}$	S4				Insp.			All Dim. in mm		
09 67 225 4715.00	$3.1^{+0,1}$	2				Stand.			Orig. Size DIN A 4		
09 67 225 4704.00	$3.1^{+0,1}$	3									
			29777	24-APR-02	CV	HARTING EURL F-95972 Paris				TB 096722547xx	Blatt/*Page* 1
Part number	ø hole	Performance level	Mod.	Dat.	Name					Sub.	