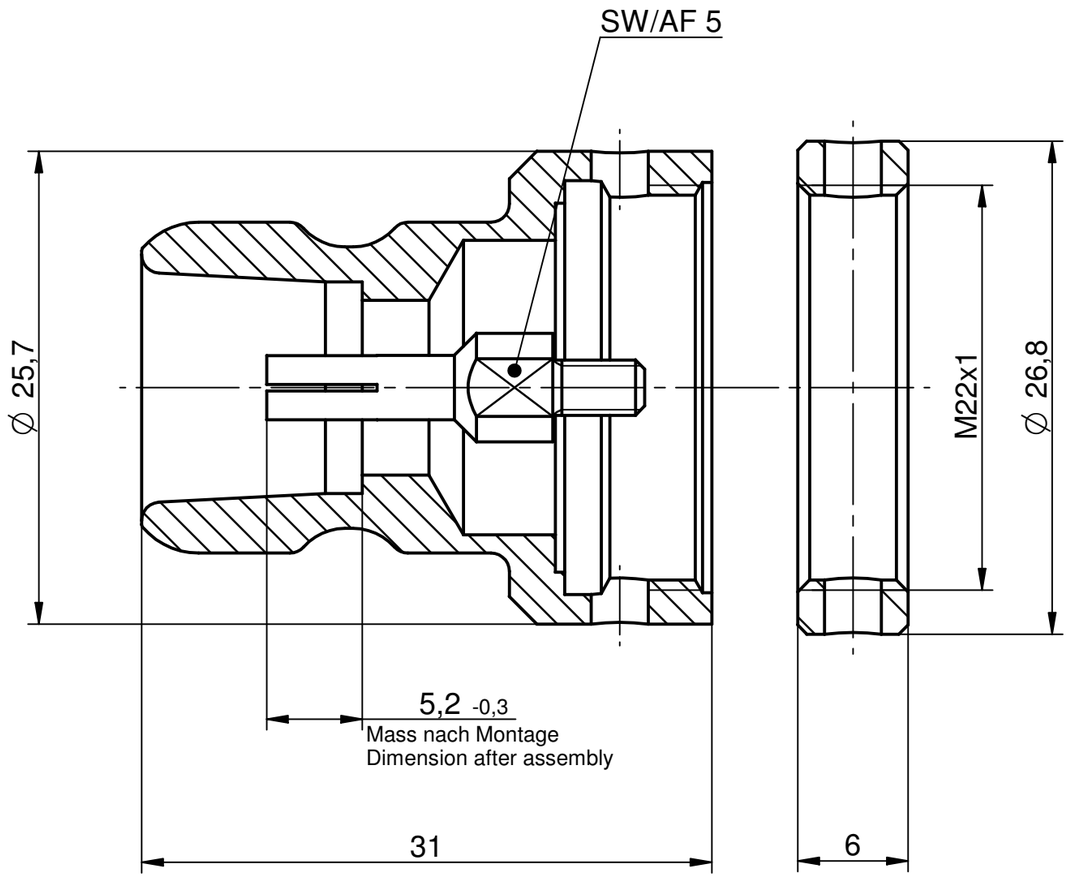

Kundenseite / Customer side

(Bosch-Nr.: 8 694 444 847)

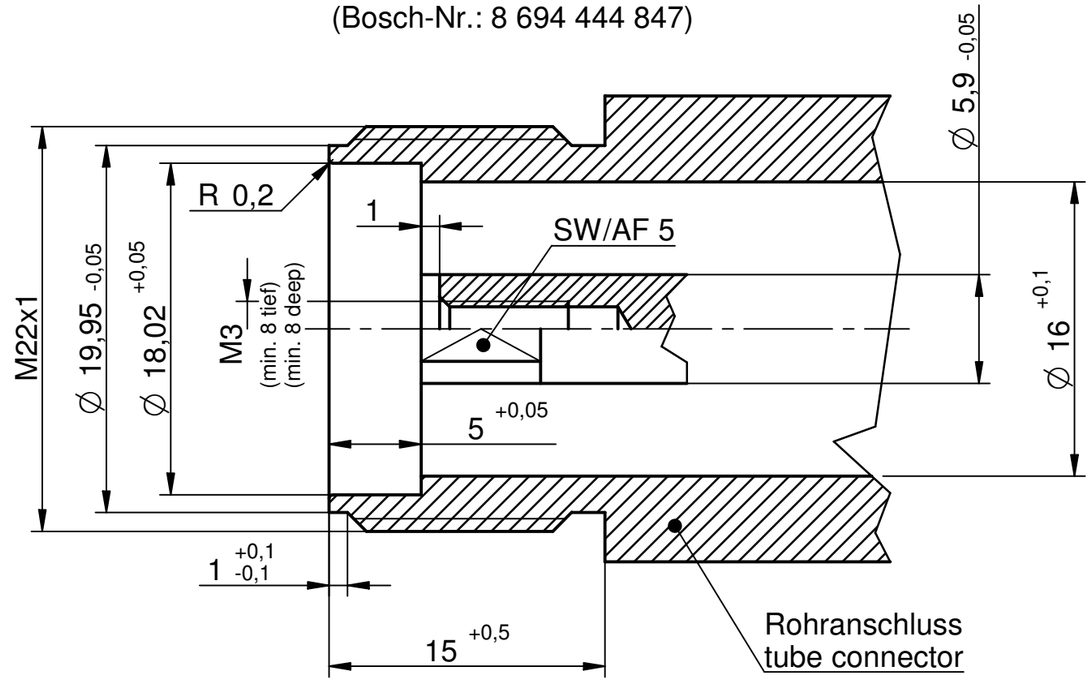

M/s 1:1

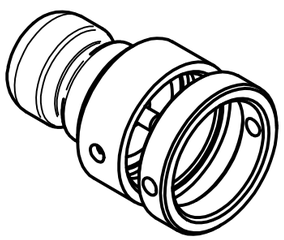

	IMS CONNECTOR SYSTEMS				general tolerance ISO 2768 mH angle: ± 5°		scale: 3:1
							Assembly instruction: Stripping dimension:
						date	name
					generate	31.10.06	Pölz
					checked		
					Norm		
							Adapter (Schnellkupplung) KS 406
							Adapter (Quick coupling) KS 406
							4225.DNS.2010.009
							Rev.
nr.	rev.	alteration	date	name			