THIS DRAWING IS UNPUBLISHED. RELEASED FOR PUBLICATION -,- .
© COPYRIGHT - BY TYCO ELECTRONICS CORPORATION. ALL RIGHTS RESERVED.

| LOC | DIST |
|---|---|
| AG | 53 |

REVISIONS

| P | LTR | DESCRIPTION | DATE | DWN | APVD |
|---|---|---|---|---|---|
| | B | REV PER ECO-09-026264 | 09MAR2010 | HMR | DB |

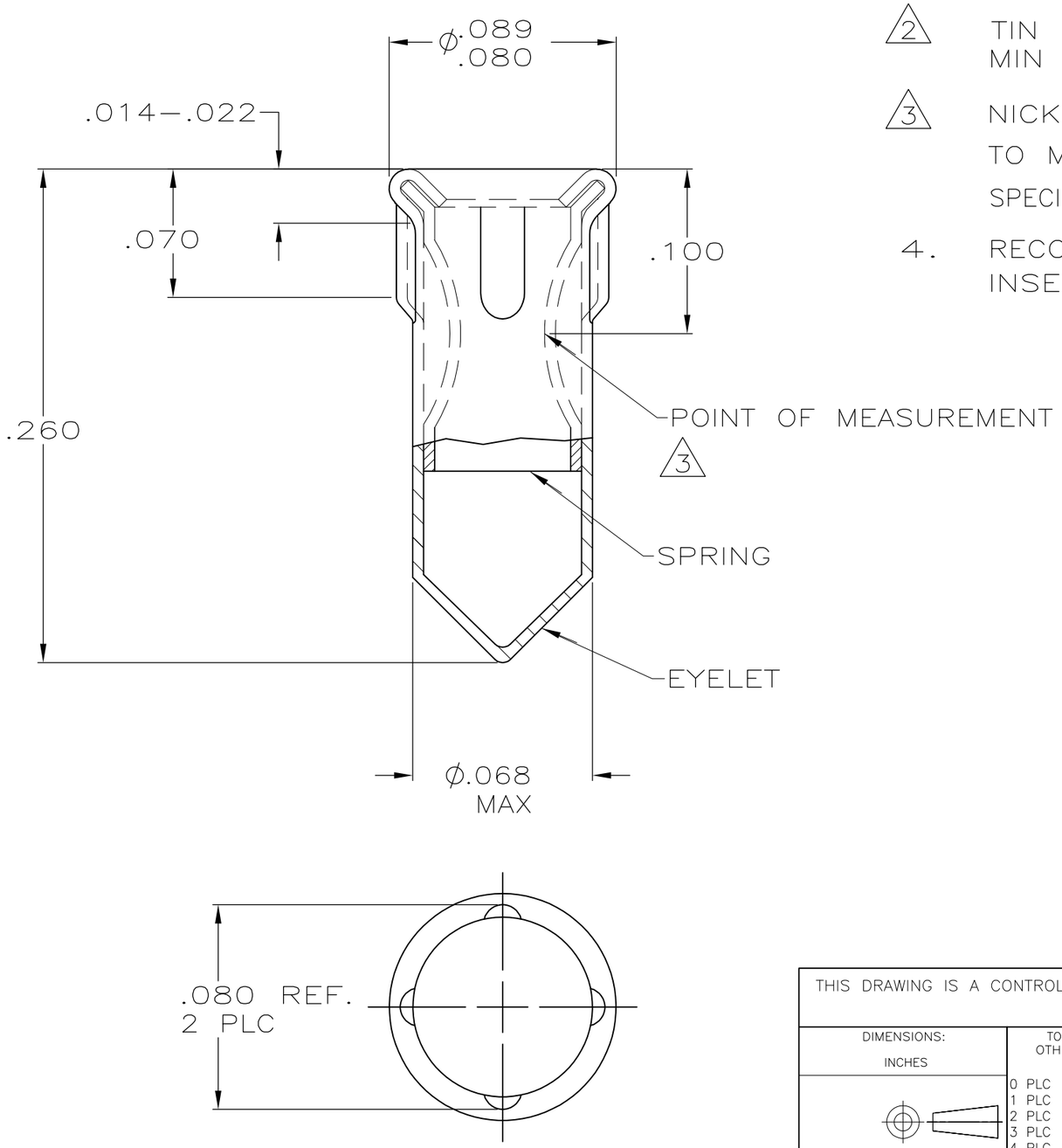


1. MATERIAL: EYELET-COPPER PER ASTM B 152
SPRING-BERYLLIUM COPPER
PER ASTM B 194

2. TIN PLATE PER ASTM B 545 .000100 MIN THICK.

3. NICKEL UNDERPLATE ALL OVER, MATING SURFACE PLATED TO MEET PERFORMANCE REQUIREMENTS OF TYCO PRODUCT SPECIFICATION 108-14008.

4. RECOMMENDED HOLE SIZE FOR MACHINE INSERTION .069-.075.

| PIN | | FINISH | | PART NUMBER |
|---|---|---|---|---|
| DIA | LENGTH | SPRING | EYELET | |
| .037-.041 | .100-.210 | 2, 3 | 2 | 5645500-2 |
| | | | | 5645500-1 |

THIS DRAWING IS A CONTROLLED DOCUMENT.

DIMENSIONS: INCHES

TOLERANCES UNLESS OTHERWISE SPECIFIED:

| | |
|---|---|
| 0 PLC | ± - |
| 1 PLC | ± - |
| 2 PLC | ± - |
| 3 PLC | ± .010 |
| 4 PLC | ± - |
| ANGLES | ± - |

MATERIAL: 1

FINISH: SEE TABLE

| | | |
|---|---|---|
| DWN | G. ATTADIA - DOCK5 | 20APR2005 |
| CHK | J. HAVENER | 20APR2005 |
| APVD | J. HAVENER | 20APR2005 |
| PRODUCT SPEC | — | |
| APPLICATION SPEC | — | |
| WEIGHT | — | |

Tyco Electronics

Tyco Electronics Corporation
Harrisburg, PA 17105-3608

NAME: SOCKET, MSS, SERIES 4

| SIZE | CAGE CODE | DRAWING NO | RESTRICTED TO |
|---|---|---|---|
| A3 | 00779 | C-5645500 | — |

CUSTOMER DRAWING | SCALE NTS | SHEET 1 OF 1 | REV B