DRAWING MADE IN THIRD ANGLE PROJECTION
THIS DRAWING IS UNPUBLISHED. RELEASED FOR PUBLICATION .19 .
© COPYRIGHT 19 BY AMP INCORPORATED. ALL INTERNATIONAL RIGHTS RESERVED.

LOC	DIST
AD	25

REVISIONS				
ZONE	LTR	DESCRIPTION	DATE	APPD
	R	ADDED -6 PER EC 0G21-103-99	08 APR 99	CR
	S	REV PER EC 0U1B-0203-00	15 AUG 00	CR
	T	REV PER EC 0S12-0016-03	09JAN04	AS

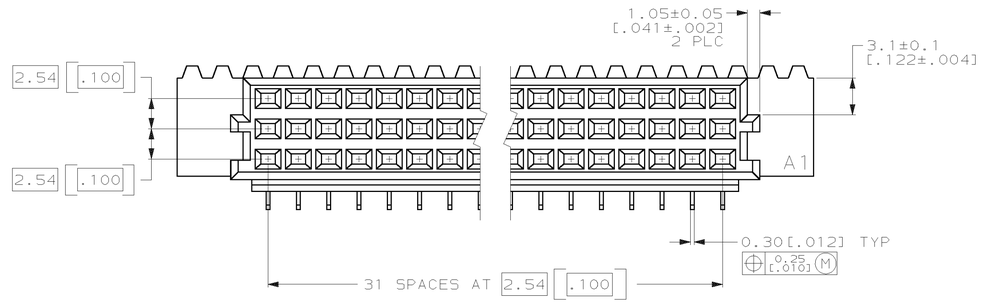

1. HOUSING MATERIAL: GLASS-FILLED POLYESTER. COLOR: GRAY.
2. CONTACT MATERIAL: PHOSPHOR BRONZE.
3. CONTACT FINISH: 0.00076[.000030] GOLD IN CONTACT AREA. 0.00127[.000050] NICKEL UNDERPLATE ALL OVER. TIN-LEAD ON POSTS.
4. RECOMMENDED HOLE SIZE FOR MANUAL APPLICATION OF CONNECTOR ONTO PC BOARD.
5. PART NUMBER, DATE CODE IDENTIFICATION, CSA LOGO HOT-STAMPED THIS APPROXIMATE AREA.
6. CONTACT POINT.
7. HOT-STAMPING ON THIS SIDE.
8. CONTACT FINISH: DIN 41612 CLASS 3 IN CONTACT AREA. TIN-LEAD ON POSTS.
9. CONTACT FINISH: DIN 41612 CLASS 1 IN CONTACT AREA. TIN-LEAD ON POSTS.
10. CONTACT FINISH: DIN 41612 CLASS 2 IN CONTACT AREA. TIN-LEAD ON POSTS.

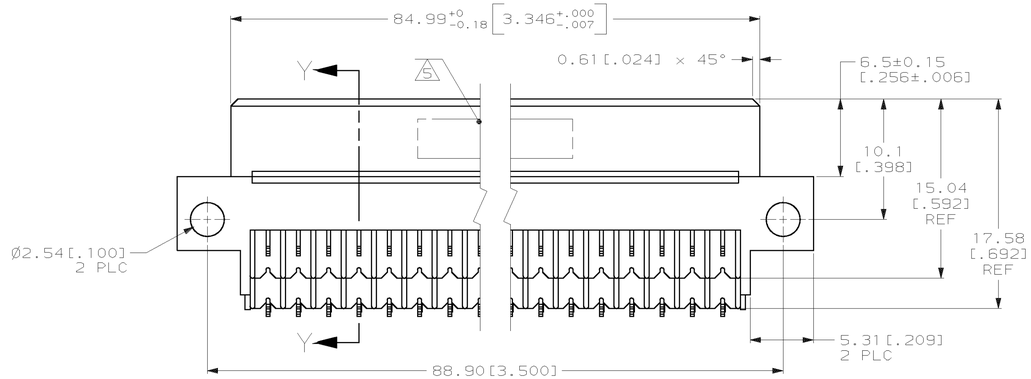

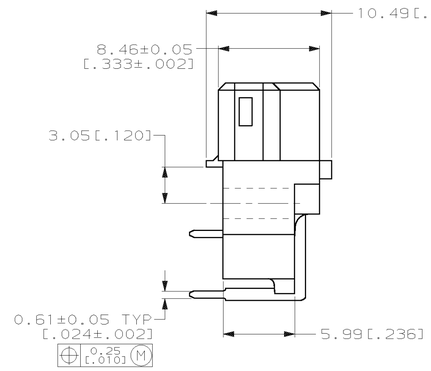

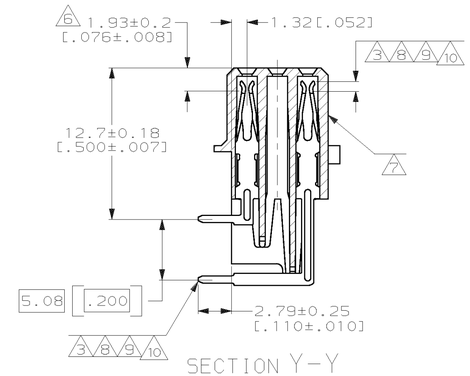

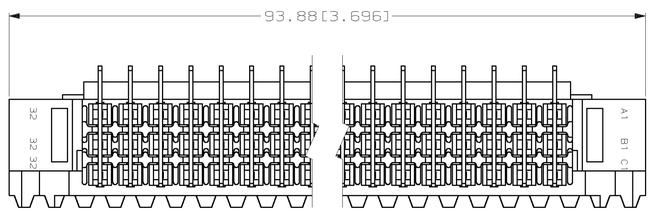

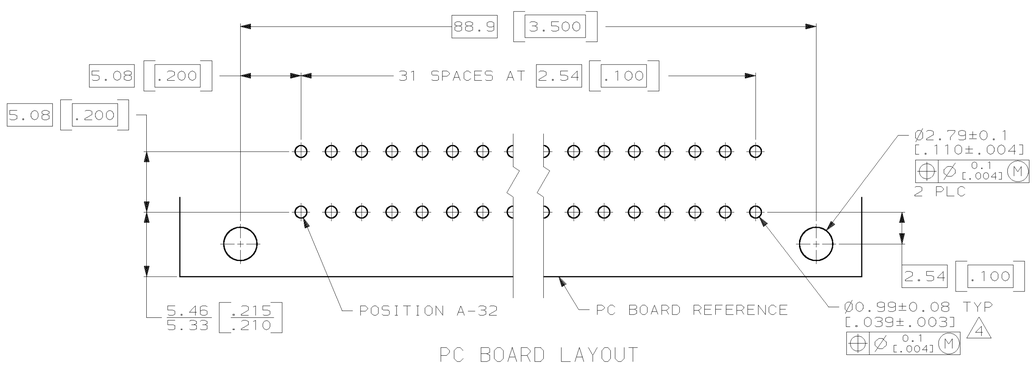

PC BOARD LAYOUT

SUPERSEDED BY 650870-4	8	1 THRU 32	X	–	X	64	650870-9
OBSOLETE	10	1 THRU 32	X	–	X	64	650870-6
	10	1 THRU 32	X	–	X	64	650870-5
	3	1 THRU 32	X	–	X	64	650870-4
OBSOLETE	9	1 THRU 32	X	–	X	64	650870-1
	NOTES	POSITIONS LOADED	ROWS LOADED C	B	A	NO. OF LOADED POSITION	ASSY PART NUMBER

DO NOT SCALE PRINT.
UNLESS SPECIFIED
DIMENSIONS IN mm [INCHES]
TOLERANCES ON :
1 PLC DEC ± -
2 PLC DEC ± 0.13[.005]
ANGLES ± -

MATERIAL
HOUSING: 1
CONTACT: 2

FINISH
CONTACT: 3 8 9 10

DR L. BRINER 9/17/90
CHK N. DRASHER 12/19/91
APPD N. DRASHER 12/19/91
APPD K.R. PARMER 12/19/91
PRODUCT SPEC –
APPLICATION SPEC –
WEIGHT –

AMP INCORPORATED
Harrisburg, Pa. 17105

NAME
RECEPTACLE ASSEMBLY, EUROCARD, TYPE R

SIZE D | CAGE CODE 00779 | DRAWING NO 650870
SCALE 4:1 | SHEET 1 OF 1

CUSTOMER DRAWING