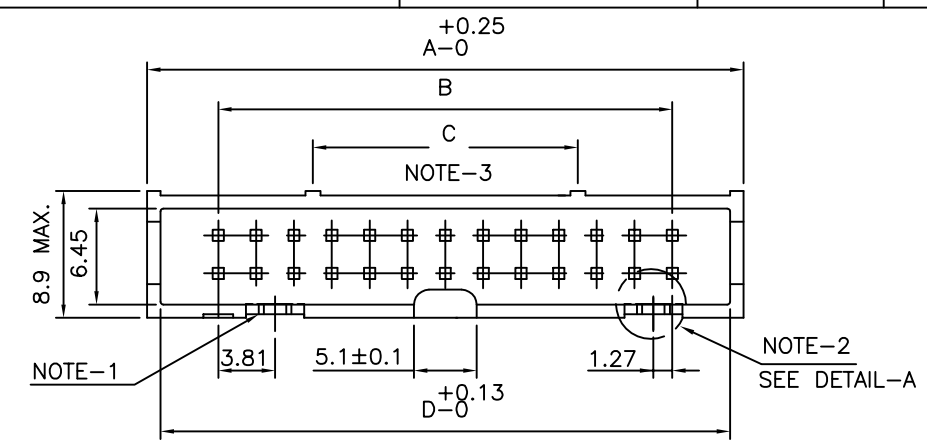

DETAIL−A

14 X = 4.35±0.35
24 X = 2.90±0.2

STRAIGHT SPILL[14&24]

13 X = 4.20±0.35
23 X = 2.80±0.2
33 X = 6.0±0.2

ANGLED SPILL[13,23&33]

DIMNS												
	D	17.91	22.99	25.53	30.61	38.23	43.31	48.39	56.01	68.71	81.41	86.49
	C	–	–	–	–	17.78	17.78	17.78	25.40	17.78	25.40	25.40
	B	10.16	15.24	17.78	22.86	30.48	35.56	40.64	48.26	60.96	73.66	78.74
	A −0 +0.25	19.71	24.79	27.33	32.41	40.03	45.11	50.19	57.81	70.51	83.21	88.29
	NO.OF POSITION	10	14	16	20	26	30	34	40	50	60	64

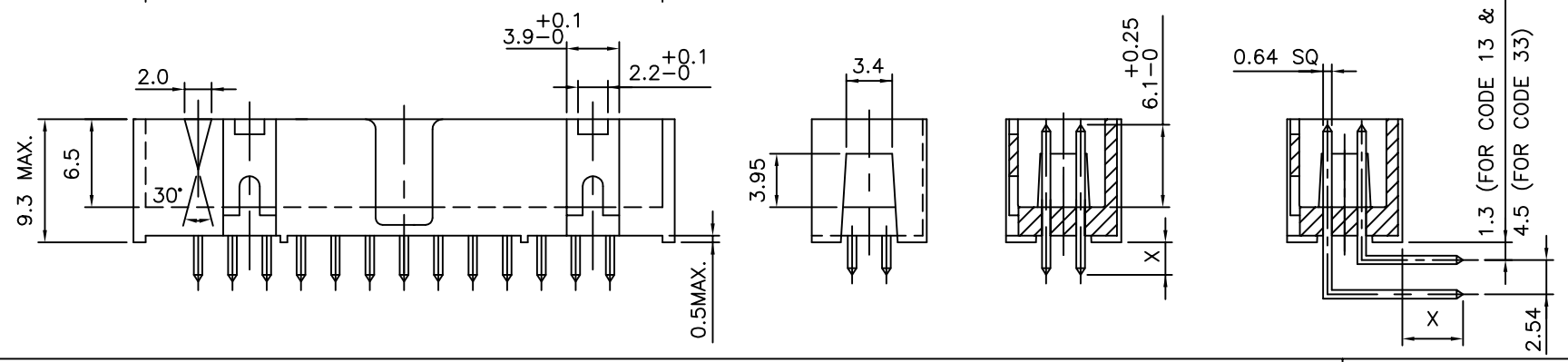

PCB DRILLING DETAILS

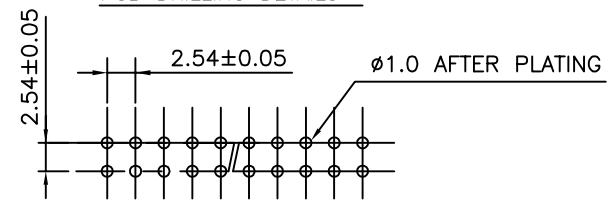

TECHNICAL SPECIFICATION

HOUSING MATERIAL — THERMOPLASTIC POLYESTER UL 94 V0; GREY

HOUSING CAN WITHSTAND EXPOSURE TO LEADFREE WAVE SOLDERING TEMPERATURE OF 260−265°C FOR STRAIGHT CONNECTORS AS IT IS IN CLASSICAL LEAD WAVE SOLDERING AT 235−250° C. FOR ANGLE CONNECTORS PROTECTIVE ADHESIVE OR METALLIC DEVICE TO BE USED AS IN CLASSICAL LEAD WAVE SOLDERING AT 235−250°C.

CONTACT MATERIAL — COPPER ALLOY

PLATING — ACTIVE ZONE − GOLD OR EQUIVALENT GOLD OVER PALLADIUM NICKEL OVER NIICKEL
TERMINATION ZONE − SnPb OVER Ni FOR TIN LEAD VERSION.
− Sn (MATTE TIN) OVER Ni FOR LEAD FREE VERSION.

CURRENT RATING — 1.5A AT 20°C

INSULATION RESISTANCE — ≥5000MΩ AT 100V

CONTACT RESISTANCE — ≤20mΩ

DIELECTRIC WITHSTANDING VOLTAGE — 1000 Vrms

OPERATING TEMPERATURE — −55°C TO +125°C

REFERENCE SPECIFICATION — IEC 603−13 / DIN 41651

NOTES

1. LEFT POLARISATION IS NOT PROVIDED FOR 10 & 14 POSITIONS.
2. RIGHT POLARISATION IS NOT PROVIDED FOR 10 POSITION.
   FOR 10 POSITION, INSTEAD OF RIGHT POLARISATION, PROJECTION AS GIVEN IN DETAIL−A WILL BE PROVIDED.
3. INTERMEDIATE LEGS ARE PRESENT ONLY ABOVE 20 POSITION.

ORDERING INFORMATION

8613 □ □ □ 5 0 □ □ □ □ □ [ ]

SERIES

NO.OF CONTACTS :−
10,14,16,20,26,30,34
40,50,60,64

LOW PROFILE BOX HEADER

TYPE OF TERMINATION

13 − LONG ANGLED SPILL
14 − LONG STRAIGHT SPILL
23 − SHORT ANGLED SPILL
24 − SHORT STRAIGHT SPILL
33 − SPL. LONG ANGLED SPILL

INSULATOR MATERIAL

3 − PBT GREY

PERFORMANCE CLASS
4 − DIN 41651 CLASS 3
5 − DIN 41651 CLASS 2
6 − DIN 41651 CLASS 1
8 − AS PER JSS 50810

LONGITUDINAL PITCH
5 − 2.54 mm
8 − 5.08 mm

SPECIAL CODES
000E1: TIN LEAD VERSION
E1LF: LEAD FREE VERSION

NOTES:-

1. THE "LF " PRODUCTS MEET EUROPEAN UNION DIRECTIVES AND OTHER COUNTRY REGULATIONS AS DESCRIBED IN GS-22-008
2. THE HOUSING WILL WITHSTAND EXPOSURE TO 260°C PEAK TEMPERATURE FOR 3.5 SECONDS IN A WAVE SOLDER APPLICATION WITH A 1.6 MM MINIMUM THICK CIRCUIT BOARD
3. LEAD FREE OR RoHS DIRECTIVE LABELING TO BE PROVIDED AS PER GS-14-920 FOR RoHS COMPATIBLE VERSION.

mat'l. code	surface	tolerance	projection	product family
–	ISO 1302	ISO 406 ISO 1101		8613

tolerances unless otherwise specified: angles 0°±1°; linear .0±.1

ltr	ecn no	dr	date			
A	–	MINI	13/09/2001			
B	I05−0123	MINI	27/07/2005			
C	I06−0066	MINI	01/06/2006			
D	I09−0242	GT	28/10/2009	dr	MINI.K.VANDANATH	13/09/2001
E	I11−0193	GT	2011−12−20	engr	RAKHEE GEORGE	13/09/2001
				chr	RAKHEE GEORGE	01/06/2006
				appd	RAKHEE GEORGE	01/06/2006

title: LOW PROFILE BOX HEADER

mm

scale −

dwg no C−8613−0040 sheet 1 of 1 size A3

type Product Customer Drawing

sheet index | revision E | sheet 1

FCIconnect.com

PDM: Rev:E

STATUS: Released

Printed: Dec 31, 2011

Copyright FCI

form: A3