THIS DRAWING IS UNPUBLISHED. RELEASED FOR PUBLICATION -,- .
© COPYRIGHT - BY TYCO ELECTRONICS CORPORATION. ALL RIGHTS RESERVED.

LOC	DIST
GP	00

REVISIONS

P	LTR	DESCRIPTION	DATE	DWN	APVD
	O	RELEASED PER EC 0S13-0207-05	22JUN05	RR	JG

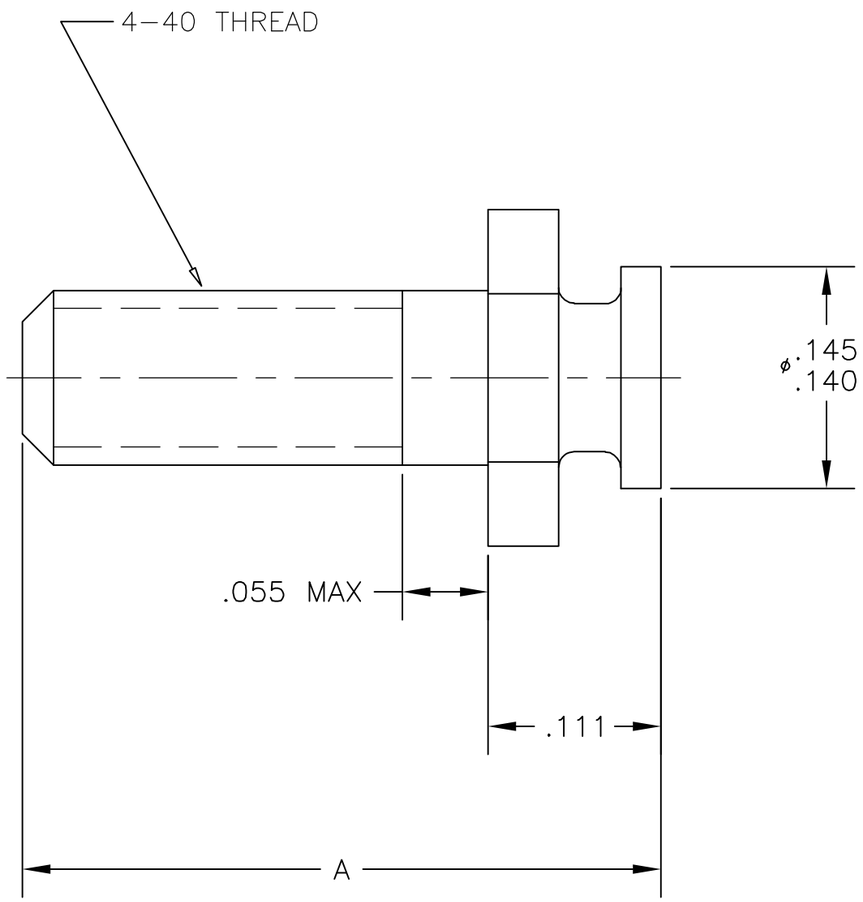

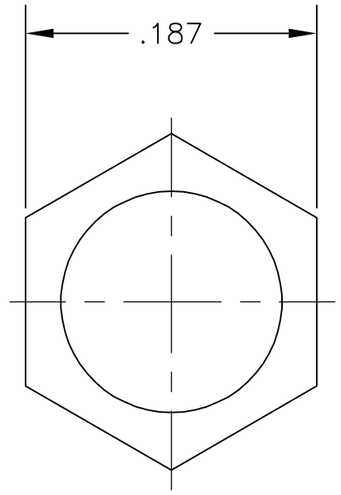

A	FINISH	PART NUMBER
.560	1	5206807-5
.410	2	5206807-3
.410	1	5206807-2

1 ZINC PLATED .000200-.000400 THICK, YELLOW CHROMATE COATING.

2 ZINC PLATED .000200-.000400 THICK, CLEAR CHROMATE COATING.

THIS DRAWING IS A CONTROLLED DOCUMENT.

DIMENSIONS: INCHES

TOLERANCES UNLESS OTHERWISE SPECIFIED:
0 PLC ± -
1 PLC ± -
2 PLC ± -
3 PLC ± .005
4 PLC ± -
ANGLES ± -

MATERIAL: COLD ROLLED STEEL

FINISH: SEE TABLE

DWN R.RICHARDSON 22JUN05
CHK C.ROHDE 22JUN05
APVD M.WALMSLEY 22JUN05
PRODUCT SPEC —
APPLICATION SPEC —
WEIGHT —

CUSTOMER DRAWING

tyco Electronics
Tyco Electronics Corporation
Harrisburg, Pa 17105-3608

NAME: LOCKING POST, AMPLIMITE
—
—

SIZE	CAGE CODE	DRAWING NO	RESTRICTED TO
A3	00779	C-5206807	—

SCALE	SHEET	OF	REV
4:1	1	1	0