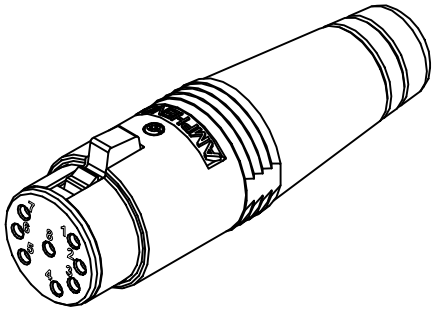

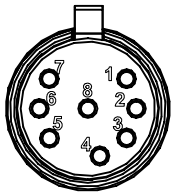

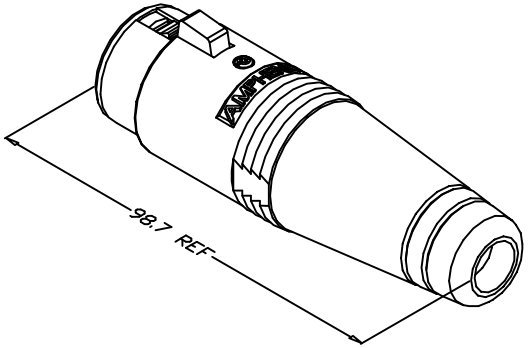

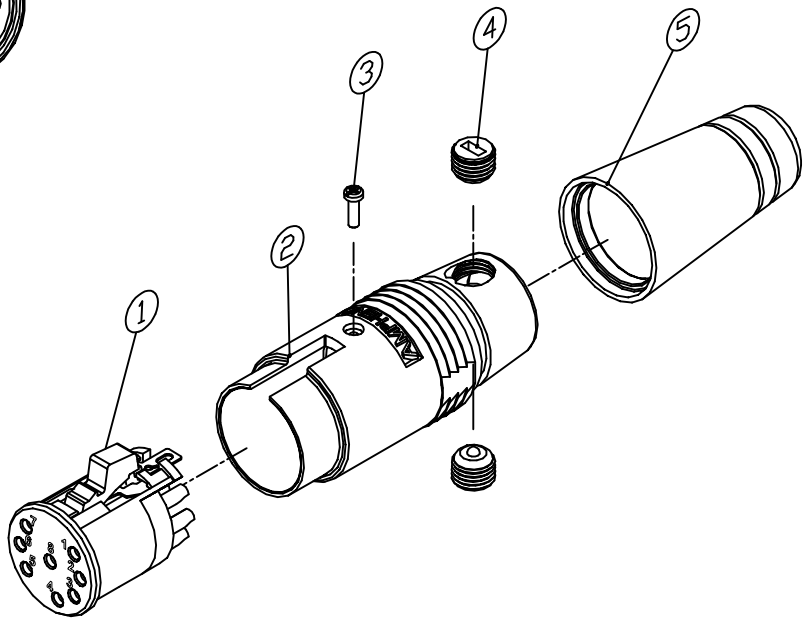

AP-*-11 TYPE	EP/AP INSERT P/N	BOOT P/N	SCREW P/N
AP - 3 - 11	156-4401-003	012-4400-000 DIAMETER. 11mm	990-4057-000 LONG SCREW
AP - 4 - 11	156-4401-004		
AP - 5 - 11	156-4401-005		
AP - 6 - 11	156-4401-006		
AP - 8 - 11	156-4401-008	012-4400-001 DIAMETER. 14.5mm	990-4057-001 SHORT SCREW

NOTE: 1. FOR EXAMPLE: FOR AN EP-8-11 USE ASSY No. 128154-0008

ITEM	PART No.	DWG No.	DESCRIPTION	QTY
5	SEE CHART	SEE CHART	AP BOOT	1
4	SEE CHART	SEE CHART	3/8"-24 UNF PLASTIC CABLE CLAMP SCREW	2
3	990-4400-000	990-4400-000	2-32 PAN HEAD SCREW	1
2	248-4411-000	248-4411-000	AP MRK II 11 SHELL	1
1	SEE CHART	SEE CHART	AP SOCKET INSULATOR ASSY	1

REV.	CHANGE DETAILS	BY	DATE	CHG/No
3	UPDATE TO AMPHENOL TITTLE BLOCK & LOGO REDRAW, ADD BOM & 3D VIEWS	M.N.H.	19-04-01	7786
~~2~~	REFER TO CHANGE NOTE 6253	R.D.	18-09-95	6253
~~0~~	FIRST ISSUE	S.M.D	05-03-90	----

UNLESS OTHERWISE SPECIFIED TOLERANCE TO BE

LINEAR	ANGULAR
X ± 1.00	X° ± 1°
X.X ± 0.50	X°X' ± 30'
X.XX± 0.10	X°X'X" ± 15'

BREAK ALL SHARP EDGES AND REMOVE ALL BURRS

DO NOT SCALE

DIMENSIONS IN MILLIMETRES

THIRD ANGLE PROJECTION

THIS DOCUMENT IS THE PROPERTY OF AMPHENOL AUSTRALIA PTY. LTD.. NO PART THEREOF MAY BE REPRODUCED AND USED WITHOUT THE PRIOR WRITTEN CONSENT OF THE OWNER

CAD FILE: 00809100 | DRN: S.M.D | DATE: 05-03-90
MATL: REFER TO COMPONENT | CKD: T.N | DATE: 18-09-01
FINISH: REFER TO COMPONENT | APP'D: P.M | DATE: 11-10-01
SCALE: 2:1 UOS | PART No: 128154-000* | SIZE: A3

TITLE: AP-*-11 CUSTOMER/ASSEMBLY DRAWING

Amphenol
Amphenol Australia Pty.Ltd, 2 Fineways Blvd, Keysborough, Vic.3173

DRAWING NO. 128154-000* | SHEET 1 OF 1