CHARACTERISTICS					
PARAMETER	MIN	TYP	MAX	UNITS	CONDITIONS/REMARKS
SUPPLY VOLTAGE	5.4	8.0	13.2	VOLTS	-25° C TO 85° C
SUPPLY CURRENT		13	20	mA	MAX @ -25° C, TYP @ 25°, VS = 8.0V, EXCLUDES LOAD
OUTPUT CURRENT	1			mA	SINKING OR SOURCING
OUTPUT VOLTAGE SWING	(-V)+1.25		(+V)-1.25	VOLTS	MAX CLAMPED @ 9.0 VOLTS MIN
SENSITIVITY	18.3		20.8	mV/N1	@ Vs = 8.0 VOLTS & 25° C 5
LINEARITY		.5	1.0	% OF SPAN	DEV FROM STR LINE FROM -1 MAX TO +1 MAX 1
Vout @ Ø N1	.5(Vs)-2%		.5(Vs)+2%	VOLTS	25° C
TEMP ERROR - NULL	-.02		+.02	%/° C	-25° C TO 85° C
TEMP ERROR - GAIN	-.06		+.01	5/° C	-25° C TO 85° C

CSLA2CFI

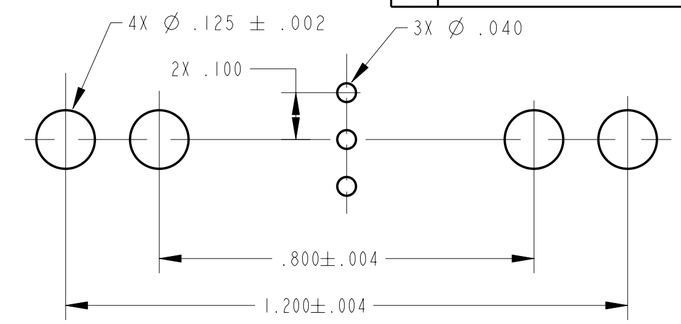

SUGGESTED HOLE CENTERS
SCALE 4:1

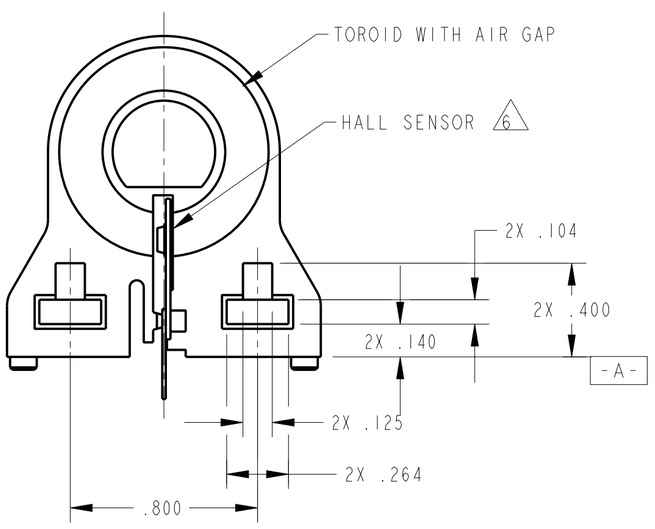

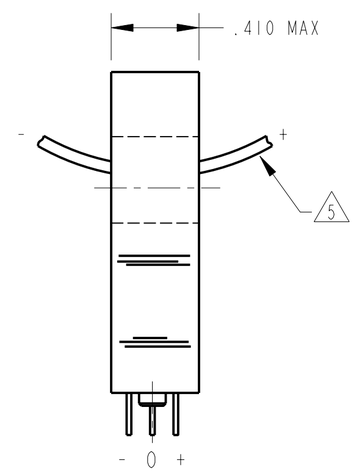

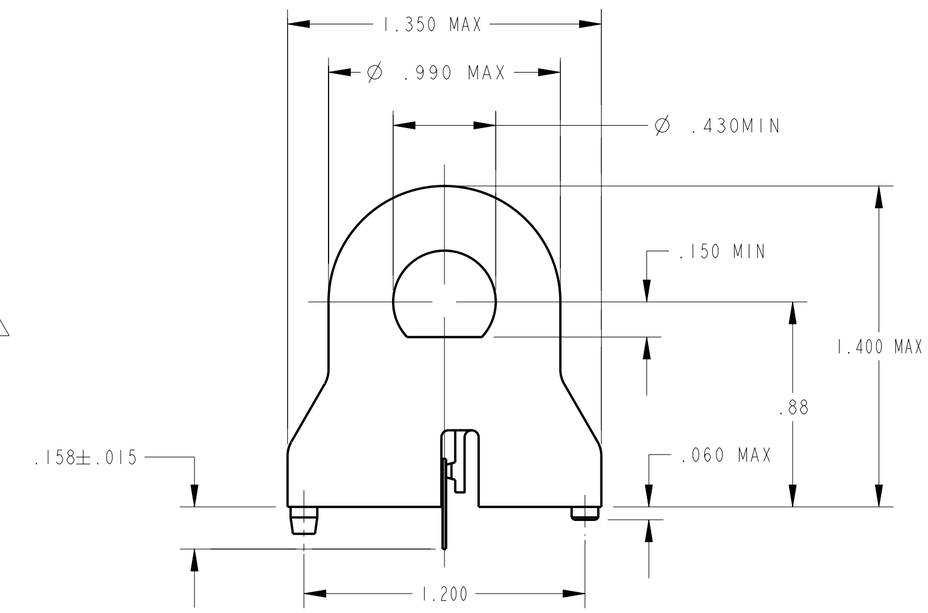

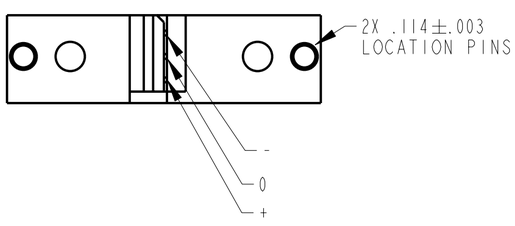

NOTES
1. SUGGESTED I MAX FOR LINEAR OPERATION IS 125 AMPS
2 - RECOMMENDED MOUNTING IS 4-40 SQUARE NUT AND .375 LONG 4-40 SCREW
3 - CONVENTIONAL CURRENT FLOW IN DIRECTION INDICATED WILL CAUSE AN INCREASE IN OUTPUT VOLTAGE
4 - THE DEVICE CANNOT BE DAMAGED BY MAGNETIC OVERDRIVE
5. AT Vs OTHER THAN 8.0 VOLTS, SENSITIVITY = (NUMBER SHOWN) X Vs/8
6. BACKSIDE OF HALL SENSOR IS ELECTRICALLY CONNECTED TO THE "_" TERMINAL
7 - SENSOR COATED WITH HUMISEAL#
8 - CORE RO NE VISUALLY CENTERED ABOUT SENSOR

THIRD ANGLE PROJECTION
SCALE 2 : 1
DO NOT SCALE PRINT

UNLESS OTHERWISE SPECIFIED TOLERANCES ARE

ONE PLACE	(.0)	± .030
TWO PLACES	(.00)	±.015
THREE PLACES	(.000)	± .005
ANGLES		±

WEIGHT

THIS DRAWING COVERS A PROPRIETARY ITEM AND IS THE PROPERTY OF MICRO SWITCH, A DIVISION OF HONEYWELL. THIS DRAWING IS NOT TO BE COPIED OR USED WITHOUT THE APPROVAL OF MICRO SWITCH.

MICRO SWITCH a Honeywell Division
FED. MFG. CODE 91929

CURRENT SENSOR

CATALOG LISTING
CSLA2CFI

ANSI Y14.5M-1982 APPLIES

CSLA2CFI | PAGE 1 OF 1 | RELEASE NO. PR-22035 | REPLACES
DRAWING NUMBER | ISSUE 2 | CHECK
REVISIONS
A 200456 LJK 26 MAY 00
CHECK | CHECK | SAV 24 MAY 00 | CHECK | 24 MAY 00
PTC/CAD 2D | DRAWN LJK 24 MAY 00