PRODUCT NO.	THREADED INSERT	DIM "A"	CUSTOMER PART NUMBER
95148-001	WITHOUT INSERT	.20/5.1	----------
95148-002	WITH INSERT	.20/5.1	81G4191

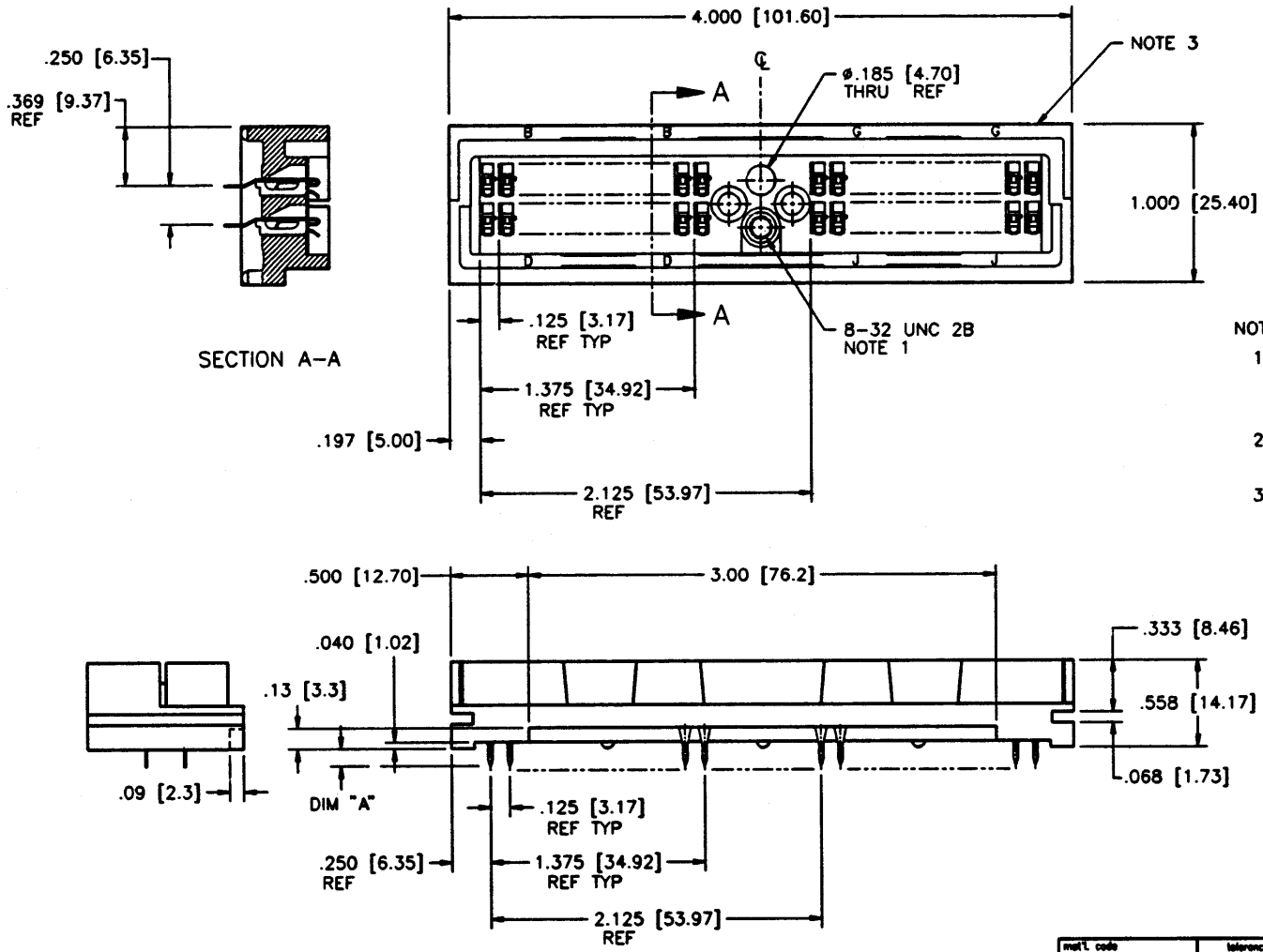

NOTES:

1. .185/4.70 CLEARANCE HOLE USED WHEN NOT USING INSERT STYLE.
2. HOUSING MATERIAL IS ULTEM 2310, LIGHT GRAY.
3. MARKINGS: MARK "BERG", BERG P/N, IBM P/N, AND DATE CODE ON SIDE OF HOUSING.

CUSTOMER COPY	BERG ELECTRONICS		
projection	title	SERPENT - SOLDER TAB II ASS'Y "A"	
INCH	product family	ADAPTOR	code 210
scale 2/1	size C	dwg no 95148	sheet 1 of 1

PDM: Rev:A STATUS:Released Printed: Dec 09, 2007