SKHL

6×3.5mm Compact (Snap-in Type)

Switch contributing to high-density mounting, available with top or side push operation.

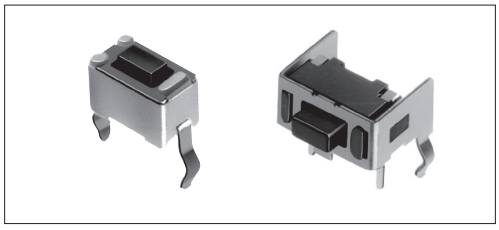

Typical Specifications

Items	Specifications
Rating (max.)	50mA 12V DC
Rating (min.)	10μA 1V DC
Initial contact resistance	500mΩ max.
Travel (mm)	0.25

Product Line

Toppush Type

Product No.	Operating force	Operating direction	Operating life (5mA 12V DC)	Stem color	Stem height	Minimum order unit (pcs.) Japan	Minimum order unit (pcs.) Export	Drawing No.
SKHLAAA010	0.98N	Toppush	50,000 cycles	Black	h=4.3mm	1,000	1,000	1
SKHLACA010	1.57N			Dark gray				
SKHLAJA010	2.55N		30,000 cycles	Red				
SKHLABA010	0.98N		50,000 cycles	Black	h=5mm			
SKHLADA010	1.57N			Dark gray				
SKHLAKA010	2.55N		30,000 cycles	Red				

Sidepush Type

Product No.	Operating force	Operating direction	Operating life (5mA 5V DC)	Stem color	Terminal length	Minimum order unit (pcs.) Japan	Minimum order unit (pcs.) Export	Drawing No.
SKHLLAA010	0.98N	Sidepush	50,000 cycles	Black	ℓ =3.5mm (PC board t : 1.6)	1,000	1,000	2
SKHLLBA010	1.57N			Dark gray				
SKHLLFA010	2.55N		30,000 cycles	Red				
SKHLLCA010	0.98N		50,000 cycles	Black	ℓ =2.5mm (PC board t : 1.0)			
SKHLLDA010	1.57N			Dark gray				

Packing Specifications

Bulk

Number of packages (pcs.)		Export package measurements (mm)
1 case / Japan	1 case / export packing	
10,000	30,000	309 × 476 × 347

Refer to **P.288** for soldering conditions.

Dimensions

Unit:mm

No.	Photo	Style	PC board mounting hole dimensions (Viewed from switch mounting face)
1	Toppush	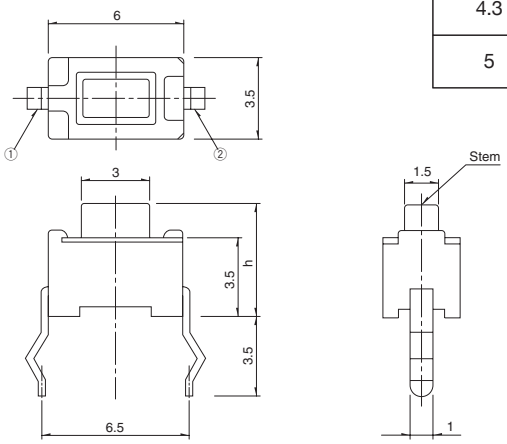 h: 4.3, 5	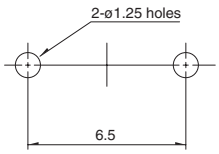
2	Sidepush™ 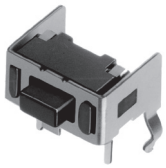	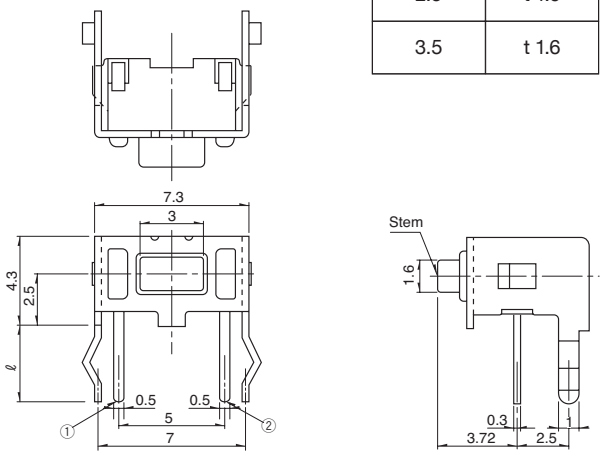 ℓ: 2.5, 3.5; PC board: t 1.0, t 1.6	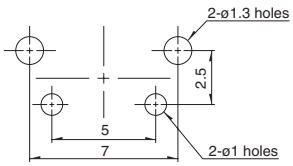

Circuit Diagram

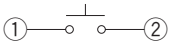

TACT Switch™

List of Varieties

Type			Sharp Feeling Type									
			Snap–in									
Series			SKHR	SKHL	SKHH	SKHW	SKQJ	SKQB	SKQE	SKHC	SKHL	SKHH
Photo							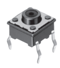	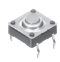				
Features			—	—	—	—	—	—	Long Life	—	—	—
Water-proof			—	—	—	○	—	●	—	—	—	—
Dust-proof			—	—	—	●	●	●	●	—	—	—
Operating direction	Top push		●	●	●	●	●	●	●	●	—	—
	Side push		—	—	—	—	—	—	—	—	●	●
Dimensions (mm)	W		□4.5	6	□6		□6.6	□10	□12		7.3	7.5
	D			3.5							7.22	7.85
	H		3.8	4.3			5	5	4.3			7.4
Operation force coverage	~1N / 1N~2N / 2N~3N / 3N~4N / 4N~5N		~1N – 2N~3N	~1N – 2N~3N	~1N – 4N~5N	1N~2N – 2N~3N	~1N – 1N~2N	1N~2N – 2N~3N	1N~2N – 2N~3N	~1N – 2N~3N	~1N – 2N~3N	~1N – 2N~3N
Travel (mm)			0.25			0.3	0.25	0.3			0.25	
Ground terminal			—	—	●	—	—	—	—	—	●	●
Operating temperature range			－30℃ to ＋85℃	－40℃ to ＋90℃			－30℃ to ＋85℃	－40℃ to ＋90℃		－40℃ to ＋85℃	－40℃ to ＋90℃	
Automotive use			—	●	●	—	—	—	—	—	—	—
Life Cycle			★2	★2	★3	★3	★2	★2	★2	★2	★3	★3
Rating (max.) (Resistive load)			50mA 12V DC									
Rating (min.) (Resistive load)			10 μA 1V DC									
Electrical performance	Insulation resistance		100M Ω min. 100V DC for 1min.									
	Voltage proof		250V AC for 1min.									
Durability	Vibration		10 to 55 to 10Hz/min., the amplitude is 1.5mm for all the frequencies, in the 3 direction of X, Y and Z for 2hours respectively									
	Lifetime		Shall be in accordance with individual specifications.									
Environmental performance	Cold		－40 ± 2℃ for 96h				－30 ± 2℃ for 96h	－430 ± 2℃ for 96h				
	Dry heat		90 ± 2℃ for 96h				－80 ± 2℃ for 96h	90 ± 2℃ for 96h				
	Damp heat		60 ± 2℃, 90 to 95%RH for 96h				60 ± 2℃, 90 to 95%RH for 1000h	60 ± 2℃, 90 to 95%RH for 96h				
Page			229	230	232	236	237	239	241	243	230	232

W : Width. The most outer dimension excluding terminal portion.
D : Depth. The most outer dimension excluding terminal portion.
H : Height. The minimum dimension if there are variances.

● TACT Switch™ Soldering Conditions 288
● TACT Switch™ Cautions 289

Notes

1. The automotive operating temperature range to be individually discussed upon request.
2. ● indicates applicability to all products in the series, while ○ indicates applicability to some products in the series.

ALPS

TACT Switch™ Soldering Conditions

Condition for Reflow

Available for Surface Mount Type.

1. Heating method: Double heating method with infrared heater.
2. Temperature measurement: Thermocouple 0.1 to 0.2 φ CA (K) or CC (T) at solder joints (copper foil surface) .
   A heat resistive tape should be used to fix thermocouple.
3. Temperature profile

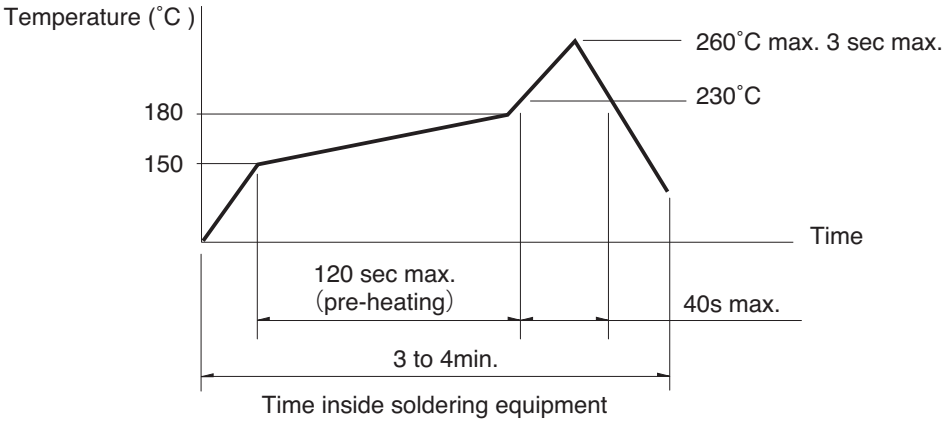

Notes

1. The above temperature shall be measured of the top of switch. There are cases where the PC board's temperature greatly differs from that of the switch, depending on the material, size, thickness of PC boards and others. The above-stated conditions shall also apply to switch surface temperatures.
2. Soldering conditions differ depending on reflow soldering machines. Prior verification of soldering condition is highly recommended.

Conditions for Auto-dip

Available for Snap-in Type and Radial Type

Items	Condition
Flux built-up	Mounting surface should not be exposed to fluk
Preheating temperature	Ambient temperature of the soldered surface of PC board. 100℃ max.
Preheating time	60s max.
Soldering temperature	260℃ max.
Duration of immersion	5s max.
Number of soldering	2times max.

SKHH、SKPD Series

Items	Condition
Flux built-up	Mounting surface should not be exposed to fluk
Preheating temperature	Ambient temperature of the soldered surface of PC board. 110℃ max.
Preheating time	60s max.
Soldering temperature	260℃ max.
Duration of immersion	5s max.
Number of soldering	2times max.

SKQJ、SKQK、SKEG Series

Items	Condition
Flux built-up	Mounting surface should not be exposed to fluk
Preheating temperature	Ambient temperature of the soldered surface of PC board. 100℃ max.
Preheating time	45s max.
Soldering temperature	255℃ max.
Duration of immersion	5s max.
Number of soldering	2times max.

Manual Soldering (Except SKRT Series)

Items	Condition
Soldering temperature	350℃ max.
Duration of soldering	3s max.
Capacity of soldering iron	60W max.

SKHH、SKHW、SKRG、SKPD Series

Items	Condition
Soldering temperature	360℃ max.
Duration of soldering	3s max.
Capacity of soldering iron	60W max.

SKQJ、SKQK、SKEG Series

Items	Condition
Soldering temperature	350℃ max.
Duration of soldering	3s max.
Capacity of soldering iron	20W max.

Notes

1. Consult with us for availability of TACT Switch™ washing.
2. Prevent flux penetration from the top side of the TACT Switch™.
3. Switch terminals and a PC board should not be coated with flux prior to soldering.
4. The second soldering should be done after the switch is stable with normal temperature.
5. Use the flux with a specific gravity of min 0.81.
   (EC-19S-8 by TAMURA Corporation, or equivalents.)