Winkel für D-Sub-Steckverbinder
Brackets for D-Sub-connectors

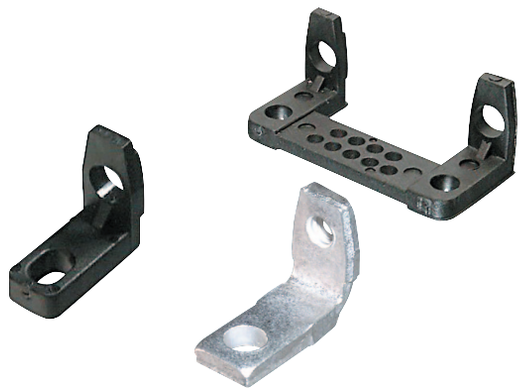

Merkmale

Diese Winkel für D-Sub Steckverbinder sind in Kunststoff (mit & ohne Zentrierung) und Metall (ohne Zentrierung) erhältlich.

Features

These brackets for D-Sub-miniature connectors are available in plastic (with & without centers) and metall (without centers)

	Dimensions					
No. of contacts	**A**	**B**	**C**	**D**	**E**	**F**
09	30.9	25.0	10.70	14.6	7.4	12.7
15	39.2	33.3	10.70	14.6	7.4	12.7
25	53.0	47.0	10.70	14.6	7.4	12.7
37	69.4	63.5	10.70	14.6	7.4	12.7
50	67.1	61.1	11.94	14.6	8.8	14.0

AWK

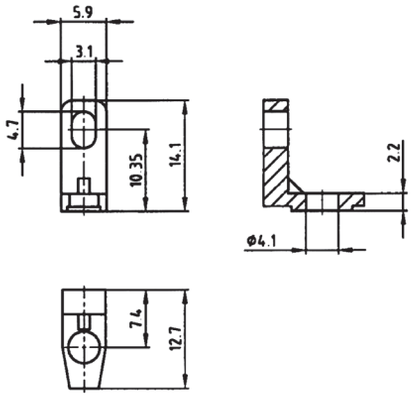

ABW

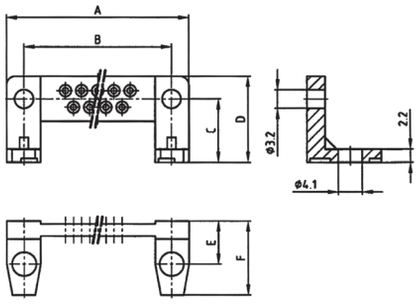

AWMS

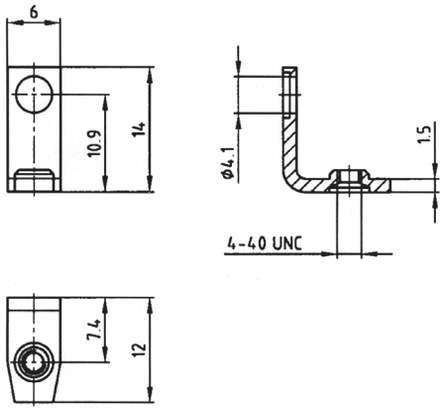

Bestellcode : **ABW - x**
Ordercode : **ABW - x**

Bitte „x“ durch die unten geeignete Option ersetzen
Please replace „x“ with appropriate option listed below

1.

1.

Polzahl
09, 15, 25, 37, 50

No. of contacts
09, 15, 25, 37, 50

Bestellcode : **AW - x - 9/50**
Ordercode : **AW - x - 9/50**

Bitte „x“ durch die unten geeignete Option ersetzen
Please replace „x“ with appropriate option listed below

1.

1.

Winkel
K -Kunstoffwinkel ohne Zentrierung
MS -Metallwinkel ohne Zentrierung

Bracket
K -Plastic bracket without centers
MS -Metal bracket without centers

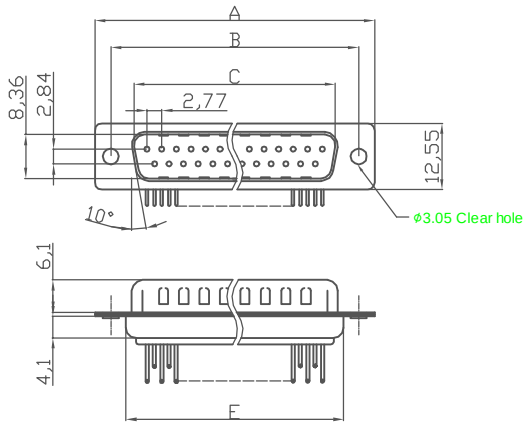

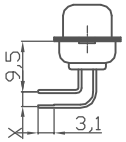

X = 2.54 or 2.84 mm

9.4 mm Footprint Machined Pin(W/O Rear Cover)

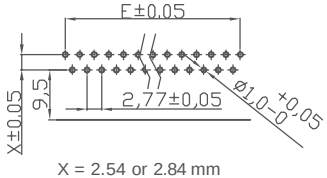

X = 2.54 or 2.84 mm

Recommended PCB Layout
Female/Male

NOTES:

MATERIAL
1.Insulator Material:Glass-filled thermoplastic PBT,UL94V-0
2.Contact Material:Copper alloy
3.Shell :Steel, 100 µ" Tin Over 50µ" min Copper
ELECTRICAL
1.Current Rating : 5AMP
2.Voltage Rating : 250V AC/rms 60Hz
3.Contact Resistance: 20mΩ Max at 1 AMP DC
4.Insulation Resistance: 1000MΩ at 500 VDC
5.Withstand Voltage: 1000V AC/rms 60Hz for 1 minute

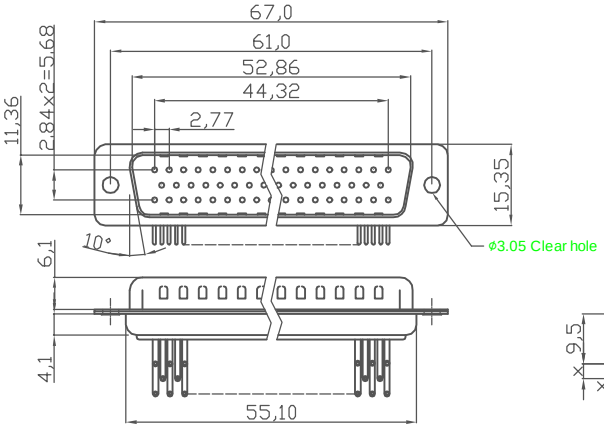

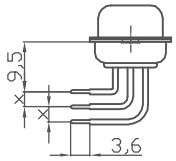

50 Positions Machined Pin(W/O Rear Cover)

X = 2.54 or 2.84 mm

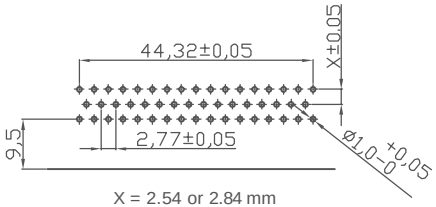

X = 2.54 or 2.84 mm

Recommended PCB Layout
Female/Male

Dimensions

Positions	A	B	C	E
09	30.81	24.99	16.92	11.08
15	39.20	33.30	25.25	19.39
25	53.05	47.04	38.96	33.24
37	69.40	63.50	55.42	49.86

RoHS compliant

Unit: mm

File No.: E198287

Scale	1:1					Date	Name	Customer-No.
TOLERANCE					Drawn	25.12.2008	Dean	
X.	±0.38				Approved	25.12.2008	Hellwig	ASSMANN WSW-No. A-DS XX AA/Z
X.X	±0.25							
X.XX	±0.13							Drawing-No. ASS 3250 CO rev01
DIM	TOL							
X.°	±3°							
X.X°	±1.0°	①	Drawn	25.12.2008	Dean			Replace / Sheet
Angle	TOL	Id.	Modification	Date	Name			

ASSMANN WSW components