MATERIALS AND FINISHES

BODY: ZINC ALLOY
PLATED SEE TABLE

CENTER CONTACT: BRASS
PLATED GOLD

INSULATOR: TEFLON

OUTER CONTACT: BERYLLIUM COPPER
PLATED SEE TABLE

FERRULE: BRASS
PLATED SEE TABLE

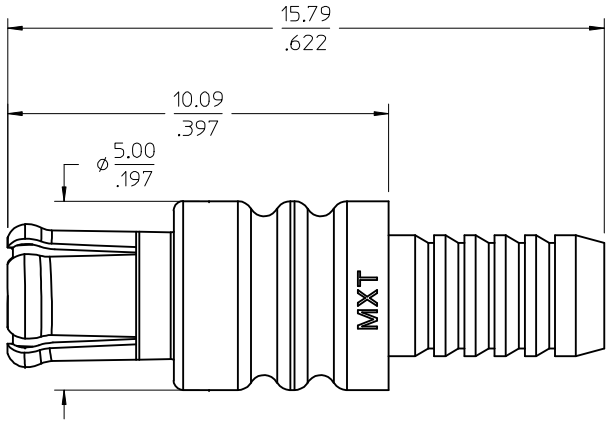

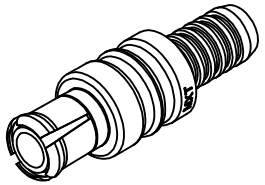

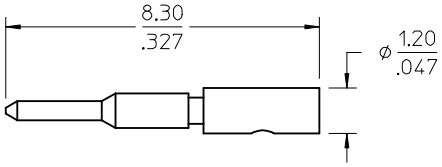

CONTACT

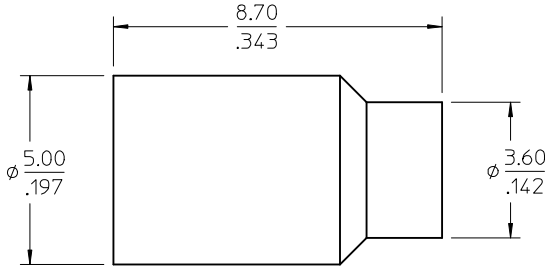

CRIMP TUBE

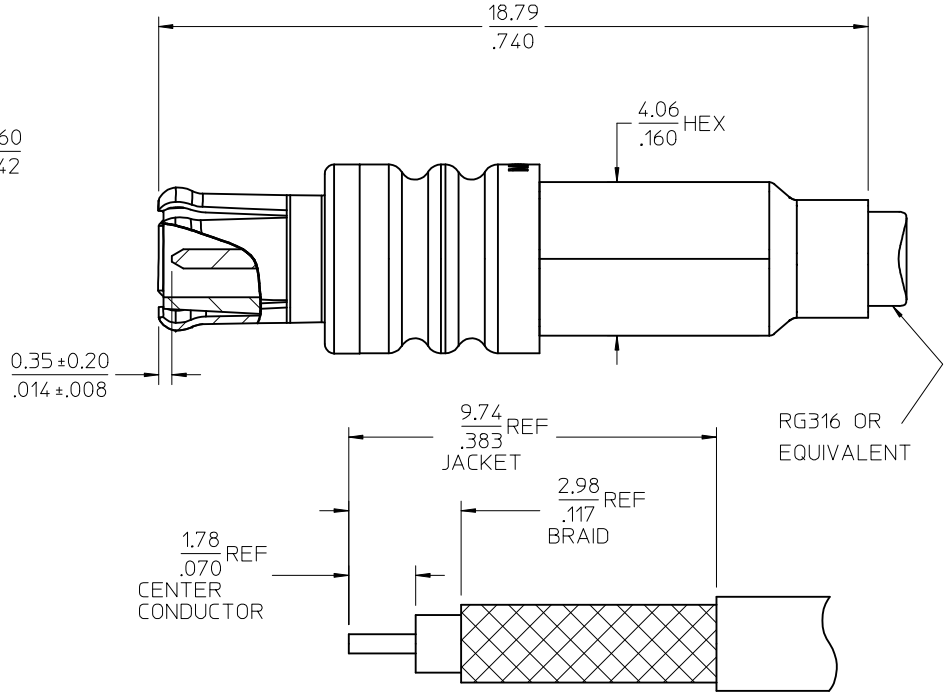

RECOMMENDED CABLE STRIP

PART NO.	FINISH BODY	FINISH OC	FINISH FERRULE	PACKAGING
73366-0028	NICKEL	GOLD	NICKEL	BULK
73366-0027	GOLD	GOLD	GOLD	BULK
73366-0026	GOLD	GOLD	GOLD	ONE PIECE 73366-0021 PER BAG
73366-0025	NICKEL	NICKEL	NICKEL	BULK
73366-0024	GOLD	GOLD	GOLD	73366-0021, SMALL TRAY
73366-0023	NICKEL	GOLD	NICKEL	73366-0020, SMALL TRAY
73366-0022	NICKEL	GOLD	NICKEL	ONE PIECE 73366-0020 PER BAG
73366-0021	GOLD	GOLD	GOLD	BULK
73366-0020	NICKEL	GOLD	NICKEL	BULK

SPECIFICATION	DESCRIPTION
PS-89675-1830	PRODUCT SPECIFICATION

CHG: ADDED -0028
PDR13071391
EC NO: URF2014-0081 2013/08/01
DRWN:YCHENG
CH'KD:
APPR:MHUANG 2013/08/08
DESCRIPTION
E7
REV

QUALITY SYMBOLS
▼=0
▽C=0

GENERAL TOLERANCES (UNLESS SPECIFIED)

	mm	INCH
4 PLACES	± ---	± ---
3 PLACES	± ---	± ---
2 PLACES	± ---	± ---
1 PLACE	± ---	± ---
ANGULAR ± 2 °		

DRAFT WHERE APPLICABLE MUST REMAIN WITHIN DIMENSIONS

DIMENSION STYLE: MM/IN
SCALE
DESIGN UNITS: METRIC
THIRD ANGLE PROJECTION

		DATE
DRAWN BY	IRIS WANG	1997/05/13
CHECKED BY	IRIS	1997/05/13
APPROVED BY	MISEN	1997/05/13

TITLE
MCX PLUG STRAIGHT
RG-316 50 OHM
MCX-PC EWR-1468

molex MOLEX INCORPORATED

MATERIAL NO. SEE TABLE
DOCUMENT NO. SD-73366-002
SHEET NO. 1 OF 1
SIZE C

THIS DRAWING CONTAINS INFORMATION THAT IS PROPRIETARY TO MOLEX INCORPORATED AND SHOULD NOT BE USED WITHOUT WRITTEN PERMISSION