CKT. SIZE	OPTION A (WITHOUT RIBS)		OPTION B (WITH RIBS)		DIMENSION	
	EDP. NO.	ENG. NO.	EDP. NO.	ENG. NO.	A	B
4	NOT TOOLED	X-70013-0008	NOT TOOLED	X-70013-1004	(5.33) .210	(2.54) .100
6	015-04-5061	70013-0001	015-04-5064	70013-1006	(7.87) .310	(5.08) .200
8	015-04-5081	70013-0007	015-04-5084	70013-1008	(10.41) .410	(7.62) .300
10	015-04-5101	70013-0002	015-04-5104	70013-1010	(12.95) .510	(10.16) .400
12	015-04-5121	70013-0012	015-04-5124	70013-1012	(15.49) .610	(12.70) .500
14	015-04-5141	70013-0014	015-04-5144	70013-1014	(18.03) .710	(15.24) .600
16	015-04-5161	70013-0016	015-04-5164	70013-1016	(20.57) .810	(17.78) .700
18	015-04-5181	70013-0018	015-04-5184	70013-1018	(23.11) .910	(20.32) .800
20	015-04-5201	70013-0003	015-04-5204	70013-1020	(25.65) 1.010	(22.86) .900
22	015-04-5221	70013-0022	015-04-5224	70013-1022	(28.19) 1.110	(25.40) 1.000
24	015-04-5241	70013-0024	015-04-5244	70013-1024	(30.73) 1.210	(27.94) 1.100
26	015-04-5261	70013-0026	015-04-5264	70013-1026	(33.27) 1.310	(30.48) 1.200
28	015-04-5281	70013-0028	015-04-5284	70013-1028	(35.81) 1.410	(33.02) 1.300
30	015-04-5301	70013-0004	015-04-5304	70013-1030	(38.35) 1.510	(35.56) 1.400
32	015-04-5321	70013-0032	015-04-5324	70013-1032	(40.89) 1.610	(38.10) 1.500
34	015-04-5341	70013-0034	015-04-5344	70013-1034	(43.43) 1.710	(40.64) 1.600
36	015-04-5361	70013-0036	015-04-5364	70013-1036	(45.97) 1.810	(43.18) 1.700
38	015-04-5381	70013-0038	015-04-5384	70013-1038	(48.51) 1.910	(45.72) 1.800
40	015-04-5401	70013-0005	015-04-5404	70013-1040	(51.05) 2.010	(48.26) 1.900
42	015-04-5421	70013-0042	015-04-5424	70013-1042	(53.59) 2.110	(50.80) 2.000
44	015-04-5441	70013-0044	015-04-5444	70013-1044	(56.13) 2.210	(53.34) 2.100
46	015-04-5461	70013-0046	015-04-5464	70013-1046	(58.67) 2.310	(55.88) 2.200
48	015-04-5481	70013-0048	015-04-5484	70013-1048	(61.21) 2.410	(58.42) 2.300
50	015-04-5501	70013-0006	015-04-5504	70013-1050	(63.75) 2.510	(60.96) 2.400

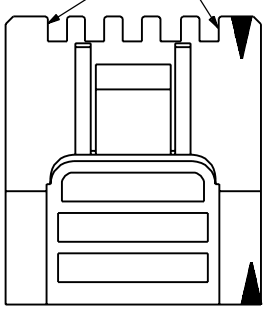

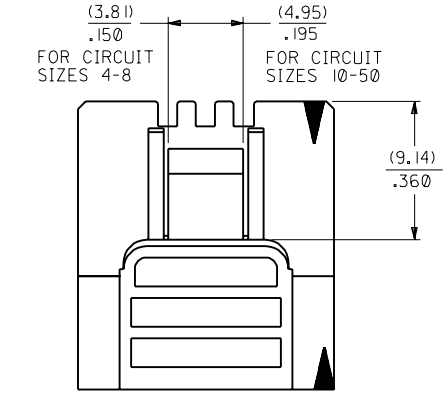

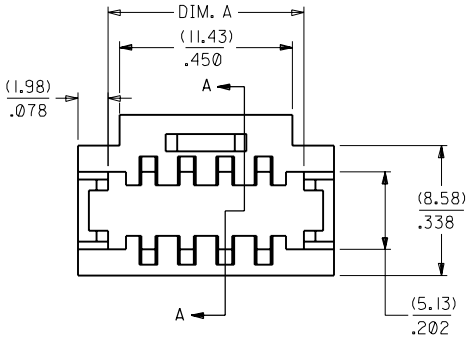

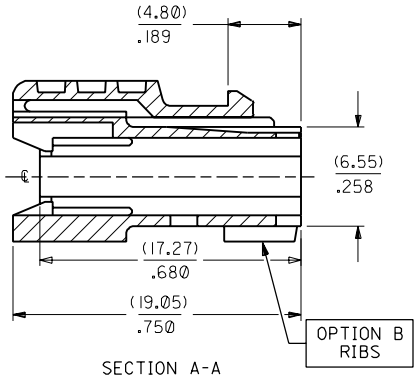

SECTION A-A

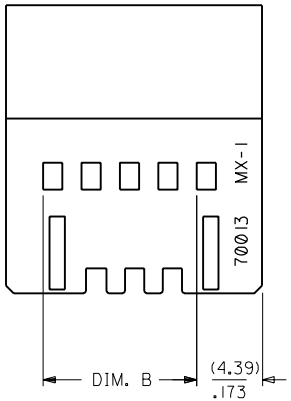

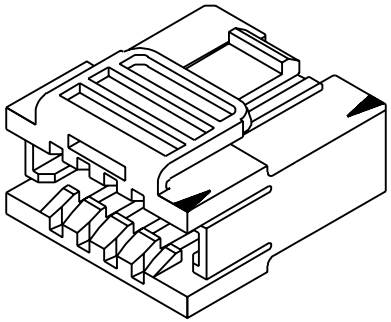

NOTES:

1) MATERIAL: GLASS FILLED POLYESTER, 94V-0, BLACK
2) MOLD TO BE EXPANDABLE FOR CIRCUIT SIZES LISTED ON CHART.
3) 10 CIRCUIT, B OPTION PART SHOWN.
4) OPTION "A" - MATES WITH HEADERS 8723-B, 8723-C 8724-B, 8724-C, 70227, 70229, AND 70022. OPTION "B" - MATES WITH HEADERS 8723-C, 8724-C 70227, 700229, AND 70022 (EXCEPT THE 50 CIRCUIT PARTS LISTED ON PAGE 4. SEE THE CHART ON PAGE 4 FOR MATING INTERIM CLIPS)
5) ALL DIMENSIONS FOR REFERENCE ONLY.
6) OPTIONAL SPRING CLIP FOR GREATER RETENTION OF MODULES IS RECOMMENDED FOR CIRCUIT SIZES 18-50. PART NUMBER 71809.
7) PACKAGE PER PK-70013-100.

LTR.	REVISIONS	LTR.	REVISIONS
M	ADD PKG NOTE ECN UDT2000-0468 SCHAFER 99/12/1	L1	REVISE PER ECR #U80583 10/10/97 HPA
L3	CLEAN UP DWG PER UDT1999-0522 99/01/05 KAS	L	REVISE PER ECR #U80062 3/1/88 MJM
L2	REVISE PER ECR #UDT1998-0206 98/01/09 HPA	K	REVISE TOP WALL & ANTI-FISH HOOK RIBS PER ECR#9622 1/17/87 MJM/JAS

DIMENSIONS SHOWN (METRIC) INCH
UNLESS OTHERWISE SPECIFIED TOLERANCES: ANGULAR ± 1/2°

	INCH	METRIC
3 PLACE	± .010	---
2 PLACE	± .015	± 0.25
1 PLACE	---	± 0.38

DRAFT WHERE APPLICABLE MUST REMAIN WITHIN DIMENSIONS

DRWG. BY DJB | CHK'D. BY DB
APP'D. BY WZ | SCALE 4:1

MFG.	SH.	REV.
4	L2	
3	L1	
2	L3	
1	M	

▽ = 0 ▼ = 0 REVISE ONLY ON CAD SYSTEM

TITLE
DUAL ROW
INTERIM CLIP
.100 GRID

MOLEX INCORPORATED
LISLE, ILL. 60532 U.S.A.

SHEET NO. 1 OF 4
DATE 06/23/86
PART NO. SEE CHART
DRWG. NO. SD-70013-0001-1050
FILE NAME ST0013X1.DGN

THIS DRAWING CONTAINS INFORMATION THAT IS PROPRIETARY TO MOLEX INC. AND SHOULD NOT BE USED WITHOUT WRITTEN PERMISSION.

DIV. DP
SIZE C

4 CKT.

6 CKT.
3 CKT. DUAL ROW - ODD

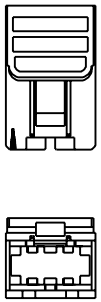

8 CKT.
4 CKT. DUAL ROW - EVEN

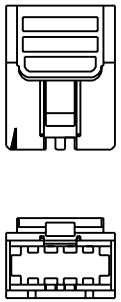

10 CKT. SHOWN ON SHT. 1

12 CKT.
6 CKT. DUAL ROW - EVEN

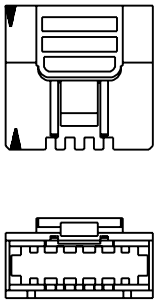

14 CKT.
7 CKT. DUAL ROW - ODD

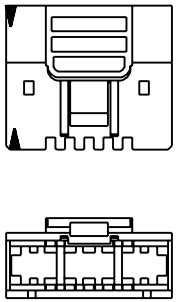

16 CKT.
8 CKT. DUAL ROW - EVEN

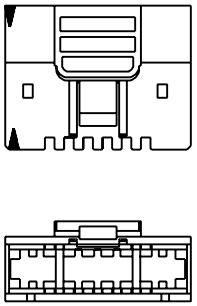

18 CKT.
9 CKT. DUAL ROW - ODD

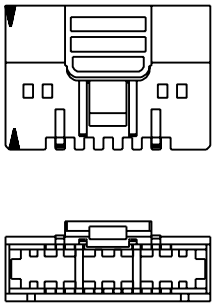

20 CKT.
10 CKT. DUAL ROW - EVEN

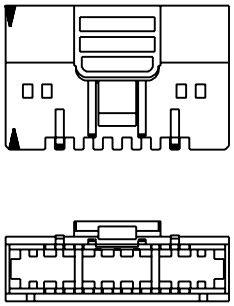

22 CKT.
11 CKT. DUAL ROW - ODD

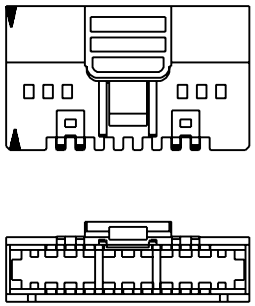

24 CKT.
12 CKT. DUAL ROW - EVEN

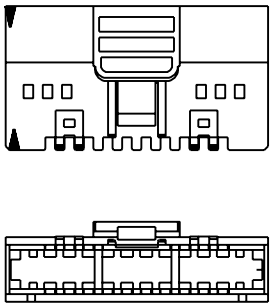

26 CKT.
13 CKT. DUAL ROW - ODD

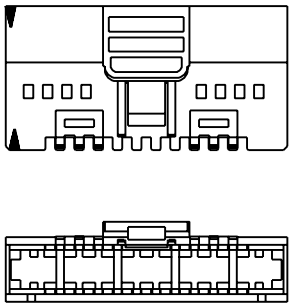

28 CKT.
14 CKT. DUAL ROW - EVEN

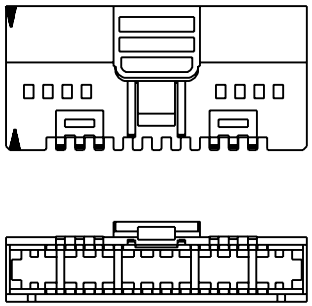

30 CKT.
15 CKT. DUAL ROW - ODD

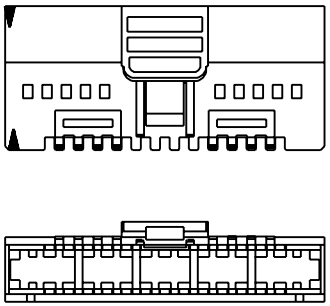

32 CKT.
16 CKT. DUAL ROW - EVEN

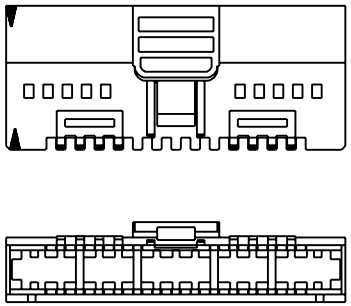

34 CKT.
17 CKT. DUAL ROW - ODD

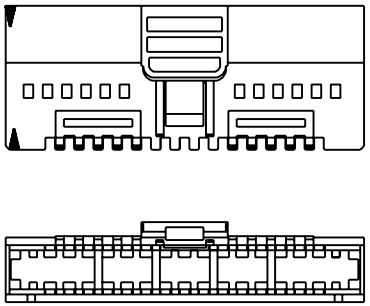

36 CKT.
18 CKT. DUAL ROW - EVEN

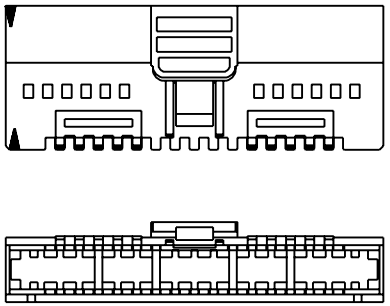

L3	SEE SHEET 1
L	SEE SHEET 1
L	SEE SHEET 1
K	SEE SHEET 1
J	SEE SHEET 1

MFG.	SH.	REV.	LTR.	REVISIONS

DIMENSIONS SHOWN (METRIC) INCH

UNLESS OTHERWISE SPECIFIED TOLERANCES: ANGULAR ± 1/2°

	INCH	METRIC
3 PLACE	± .010	---
2 PLACE	± .015	± 0.25
1 PLACE	---	± 0.38

DRAFT WHERE APPLICABLE MUST REMAIN WITHIN DIMENSIONS

▽ = 0 ▼ = 0 REVISE ONLY ON CAD SYSTEM

TITLE
DUAL ROW
INTERIM CLIP
.100 GRID

MOLEX INCORPORATED
LISLE, ILL. 60532 U.S.A.

SHEET NO. 2
DATE 06/25/86

PART NO. SEE CHART
DRWG. NO. SD-70013-0001-1050

DRWG. BY	DJB	CHK'D. BY	DB
APP'D. BY	WZ	SCALE	2:1

FILE NAME S70013X2 DGN

THIS DRAWING CONTAINS INFORMATION THAT IS PROPRIETARY TO MOLEX INC. AND SHOULD NOT BE USED WITHOUT WRITTEN PERMISSION.

DIV. DP
SIZE C

70013