THIS DRAWING IS UNPUBLISHED. RELEASED FOR PUBLICATION –,– .
© COPYRIGHT – By – ALL RIGHTS RESERVED.

LOC	DIST
G	14

REVISIONS

P	LTR	DESCRIPTION	DATE	DWN	APVD
	D1	REVISED PER ECO–12–006198	30MAR12	KH	MS

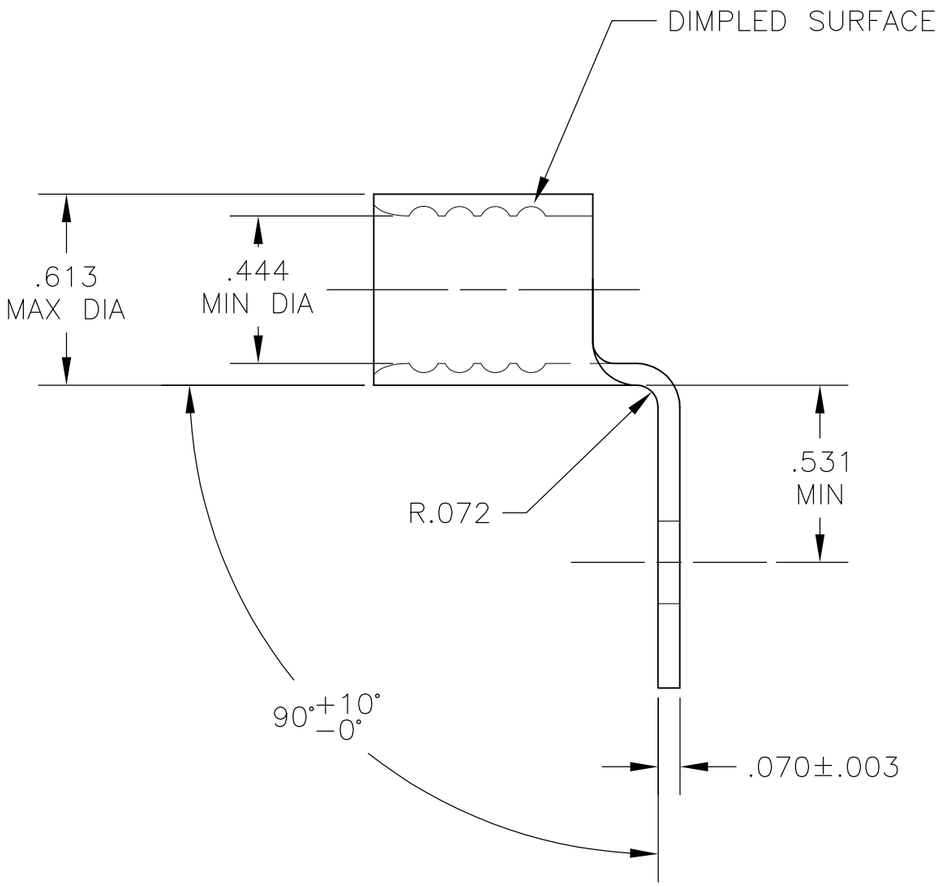

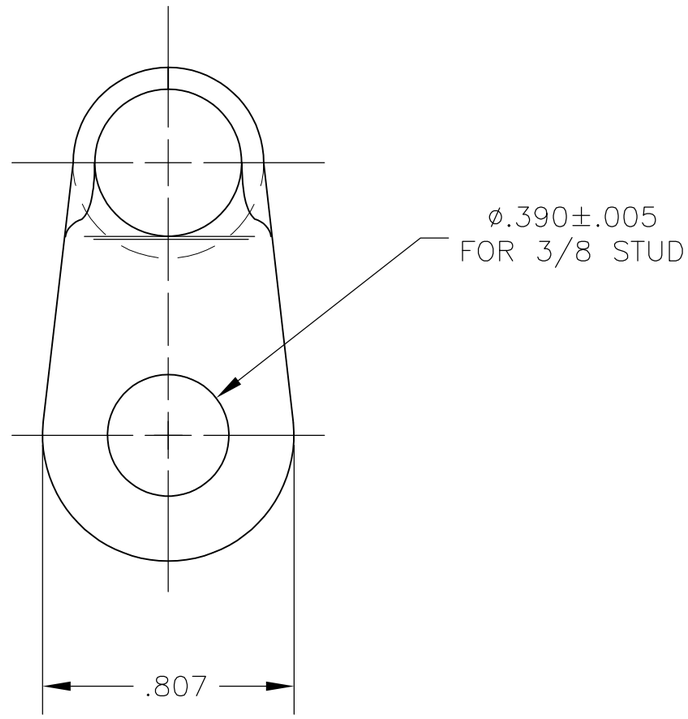

MATERIAL & FINISH	PART NO
COPPER PER ASTM B–152 ANNEALED TIN PL PER ASTM B–545	322906

THIS DRAWING IS A CONTROLLED DOCUMENT.

DIMENSIONS: INCHES

TOLERANCES UNLESS OTHERWISE SPECIFIED:

0 PLC	± –
1 PLC	± –
2 PLC	± –
3 PLC	± .008
4 PLC	± –
ANGLES	± 5°

MATERIAL: SEE TABLE

FINISH: SEE TABLE

DWN	JR RUTH	20NOV03
CHK	MJ SPICER	20NOV03
APVD	MJ SPICER	20NOV03
PRODUCT SPEC	—	
APPLICATION SPEC	—	
WEIGHT	—	

CUSTOMER DRAWING

TE Connectivity

NAME: WIRE TERMINAL
SOLISTRAND, RING TONGUE, BENT 90,
WIRE SIZE : 1/0

SIZE	CAGE CODE	DRAWING NO	RESTRICTED TO
A3	00779	C–322906	—

SCALE	SHEET	REV
2:1	1 OF 1	D1