DIALIGHT PART NUMBER	LED COLOR	DIM "A"	DIM "B"	DIM "C"
550-0207-010F	GREEN TINTED DIFFUSED	.133	.020	.043
550-0407-010F	RED TINTED DIFFUSED	.133	.020	.043
550-0507-010F	RED TINTED DIFFUSED, 5V INT RES	.197	.025	.050
550-0707-010F	GREEN TINTED DIFFUSED, 5V INT RES	.197	.025	.050
550-2207-010F	GREEN TINTED DIFFUSED	.190	.020	.043
550-2307-010F	YELLOW TINTED DIFFUSED	.197	.018	.040
550-3007-010F	R/G BI-COLOR WHITE DIFFUSED	.190	.020	.043
550-3107-010F	Y/G BI-COLOR WHITE DIFFUSED	.190	.020	.043
550-5607-010F	GREEN NON-DIFFUSED WATER CLEAR	.197	.018	.040
550-5707-010F	YELLOW NON-DIFFUSED WATER CLEAR	.197	.018	.040

RoHS COMPLIANT 550-XX07-010F

Part Numbers with the "F" suffix ending are RoHS Compliant.
For example: 550-0507-010F
Packaging is marked with "RoHS Compliant" label or equivalent markings. Parts can be wave soldered, dip soldered or hand soldered using typical lead-free soldering process with max 260°C temp. for 5 sec.

REV	ECN NO	REVISIONS	DRN	CKD	APP	DATE
A	——	NEW RELEASE	KLJ	N.O.	MES	5-2-08
B	——	ADDED P/N'S 550-2207-010F, 550-2307-010F, 550-3007-010F, 550-3107-010F, 550-5607-010F, AND 550-5707-010F.	KLJ	SM	N.O.	6-23-09

ATTENTION:
OBSERVE PRECAUTIONS FOR HANDLING ELECTROSTATIC SENSITIVE DEVICES

DIALIGHT PART NUMBER	OPERATING CHARACTERISTICS AT 25°C AMBIENT												ABSOLUTE MAXIMUM RATINGS AT 25°C AMBIENT							
	LUMINOUS INTENSITY TEST CONDITION	LUMINOUS INTENSITY (mcd)		FORWARD VOLTAGE/ CURRENT TEST COND	FORWARD VOLTAGE (V)		FORWARD CURRENT (mA)		REVERSE CURRENT (μA)	DOMINANT WAVELENGTH (nm)	PEAK WAVELENGTH (nm)	VIEWING ANGLE (DEG)	POWER DISSIP-ATION (mW)	DC FORWARD CURRENT (mA)	DC FORWARD VOLTAGE (V)	PEAK FORWARD CURRENT (mA)	REVERSE VOLTAGE (V)	STORAGE TEMP (°C)	OPERATING TEMP (°C)	SOLDERING TEMP FOR 5 SECONDS (°C)
		MIN	TYP		TYP	MAX	TYP	MAX	MAX	TYP	TYP	TYP								
550-0207-010F	I_F = 10mA	12.6	40	I_F = 20mA	2.1	2.6	——	——	100	573	565	60	100	30	——	120	5	-55 TO +100	-55 TO +100	260
550-0407-010F	I_F = 10mA	19	60	I_F = 20mA	2.0	2.6	——	——	100	623	635	60	80	40	——	200	5	-55 TO +100	-55 TO +100	260
550-0507-010F	V_F = 5V	2.1	——	V_F = 5V	——	——	10	15	100	626	635	60	——	——	7.5	——	5	-55 TO +100	-40 TO +85	260
550-0707-010F	V_F = 5V	2.0	8.0	V_F = 5V	——	——	12	15	100	——	565	60	——	——	7.5	——	5	-55 TO +100	-40 TO +85	260
550-2207-010F	I_F = 10mA	3.6	10	I_F = 10mA	2.1	3.0	——	——	10	——	563	65	75	25	——	60	3	-30 TO +100	-25 TO +85	260
550-2307-010F	I_F = 10mA	5.7	8.0	I_F = 10mA	2.0	2.4	——	——	100	585	583	60	85	20	——	60	5	-55 TO +100	-55 TO +100	260
550-3007-010F	I_F = 20mA	29/12	90/40	I_F = 20mA	1.8/2.1	2.4/2.8	——	——	100	638/569	660/565	60	100/100	40/30	——	200/120	4/5	-55 TO +100	-55 TO +100	260
550-3107-010F	I_F = 20mA	2.5	8.7	I_F = 20mA	2.1/2.1	2.8/2.8	——	——	100	588/569	585/565	50	60/100	20/30	——	80/120	5/5	-55 TO +100	-55 TO +100	260
550-5607-010F	I_F = 20mA	80	120	I_F = 20mA	2.3	3.0	——	——	100	569	565	24	135	30	——	90	5	-55 TO +100	-20 TO +100	260
550-5707-010F	I_F = 20mA	80	140	I_F = 20mA	2.2	3.0	——	——	100	585	583	24	85	20	——	60	5	-55 TO +100	-55 TO +100	260

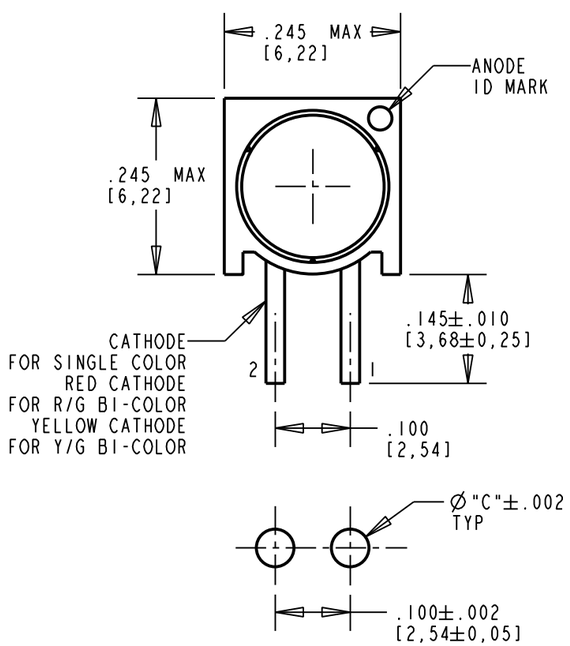

RECOMMENDED HOLE PATTERN GAUGE

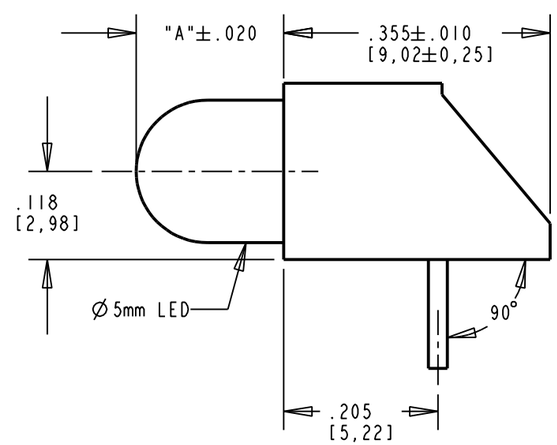

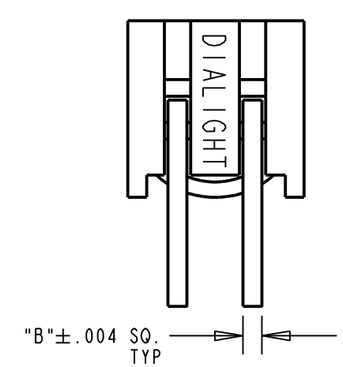

NOTES:

1. LED LEAD DIMENSIONS SHOWN ARE MEASURED AT HOUSING EXIT.
2. LEADS TO FIT INTO HOLES SPACED AS PER PATTERN.
3. PIN NUMBERS FOR REFERENCE ONLY, DESIGNATION NON-EXISTENT ON PART.
4. DIALIGHT PART NUMBERS: 550-XX07-010F
5. THIS ASSEMBLY CONTAINS ELECTROSTATIC DISCHARGE SENSITIVE DEVICES (ESDS). MAINTAIN ALL PRECAUTIONARY MEASURES DURING ASSEMBLY, HANDLING, AND STORAGE IN ACCORDANCE WITH IPC-A-610.

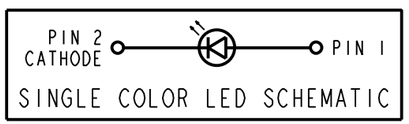

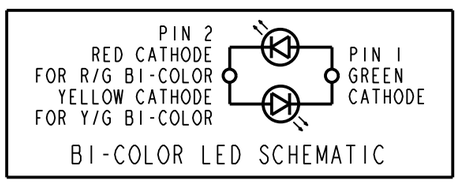

THIS DRAWING AND THE CONTENTS HEREIN ARE CONFIDENTIAL AND THE SOLE PROPERTY OF DIALIGHT. REPRODUCTION OF THIS DRAWING OR CONSTRUCTION OF ANY PARTS WITHIN THIS DRAWING ARE FORBIDDEN WITHOUT THE WRITTEN CONSENT OF DIALIGHT.

SCALE: 5.000
ALL DIM'S IN: INCHES (MM)
TOLERANCES:
UNLESS OTHERWISE SPECIFIED
FRACTIONS: ±1/64
DECIMALS (.XX): ±.02
DECIMALS (.XXX): ±.015
ANGLES: ±3°
FINISH:
FSCM 83330

DRAWING NUMBER: C-17607
REV: B
TITLE: Ø5mm LED CBI; CATHODE LEFT RoHS COMPLIANT
MATERIAL

Dialight
1501 ROUTE 34 SOUTH
FARMINGDALE, NJ 07727

SHEET 1 OF 1
FAMILY TABLE: