- **Advanced LinCMOS™ Silicon-Gate Technology**
- **Easily interfaced to Microprocessors**
- **On-Chip Data Latches**
- **Monotonicity Over Entire A/D Conversion Range**
- **Segmented High-Order Bits Ensure Low-Glitch Output**
- **Designed to Be interchangeable With Analog Devices AD7524, PMI PM-7524, and Micro Power Systems MP7524**
- **Fast Control Signaling for Digital Signal Processor Applications Including Interface With SMJ320**

KEY PERFORMANCE SPECIFICATIONS	
Resolution	8 Bits
Linearity error	1/2 LSB Max
Power dissipation at V_{DD} = 5 V	5 mW Max
Settling time	100 ns Max
Propagation delay	80 ns Max

J PACKAGE
(TOP VIEW)

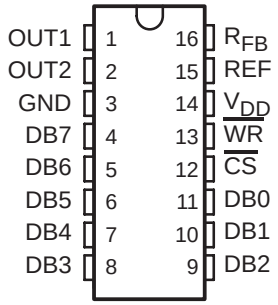

FK PACKAGE
(TOP VIEW)

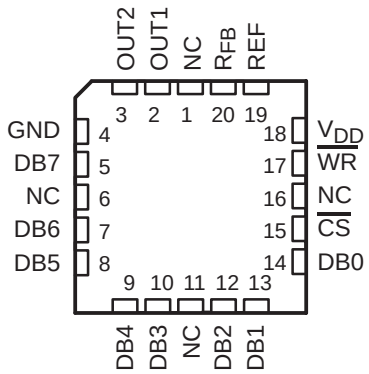

NC−No internal connection

description

The AD7524M is an Advanced LinCMOS™ 8-bit digital-to-analog converter (DAC) designed for easy interface to most popular microprocessors.

The AD7524M is an 8-bit multiplying DAC with input latches and with a load cycle similar to the write cycle of a random access memory. Segmenting the high-order bits minimizes glitches during changes in the most-significant bits, which produce the highest glitch impulse. The AD7524M provides accuracy to 1/2 LSB without the need for thin-film resistors or laser trimming, while dissipating less than 5 mW typically.

Featuring operation from a 5-V to 15-V single supply, the AD7524M interfaces easily to most microprocessor buses or output ports. Excellent multiplying (2 or 4 quadrant) makes the AD7524M an ideal choice for many microprocessor-controlled gain-setting and signal-control applications.

The AD7524M is characterized for operation from −55°C to 125°C.

AVAILABLE OPTIONS

T_A	PACKAGE	
	CERAMIC CHIP CARRIER (FK)	CERAMIC DIP (J)
−55°C to 125°C	AD7524MFK	AD7524MJ

Advanced LinCMOS is a trademark of Texas Instruments Incorporated.

PRODUCTION DATA information is current as of publication date. Products conform to specifications per the terms of Texas Instruments standard warranty. Production processing does not necessarily include testing of all parameters.

Copyright © 1995, Texas Instruments Incorporated

TEXAS INSTRUMENTS
POST OFFICE BOX 655303 • DALLAS, TEXAS 75265
POST OFFICE BOX 1443 • HOUSTON, TEXAS 77251−1443

functional block diagram

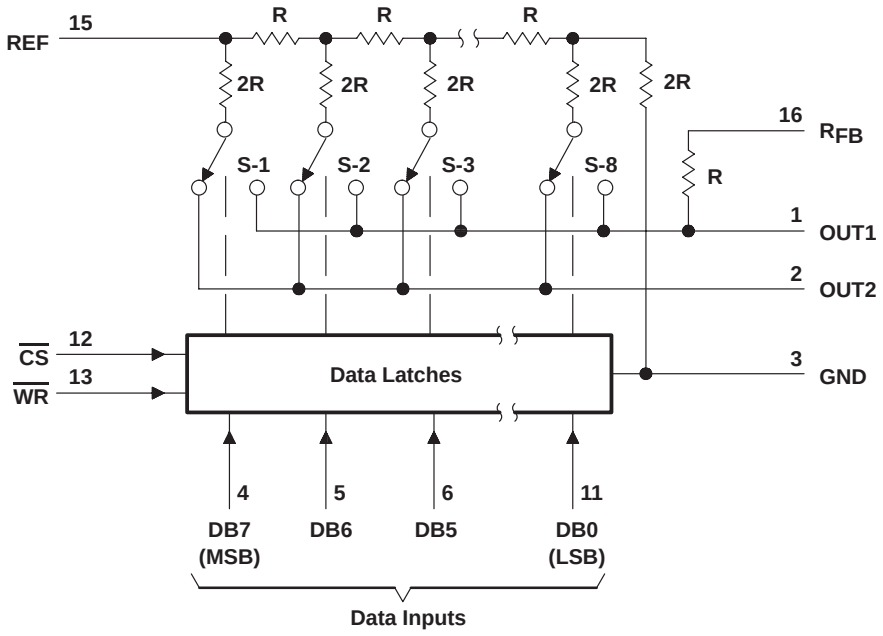

operating sequence

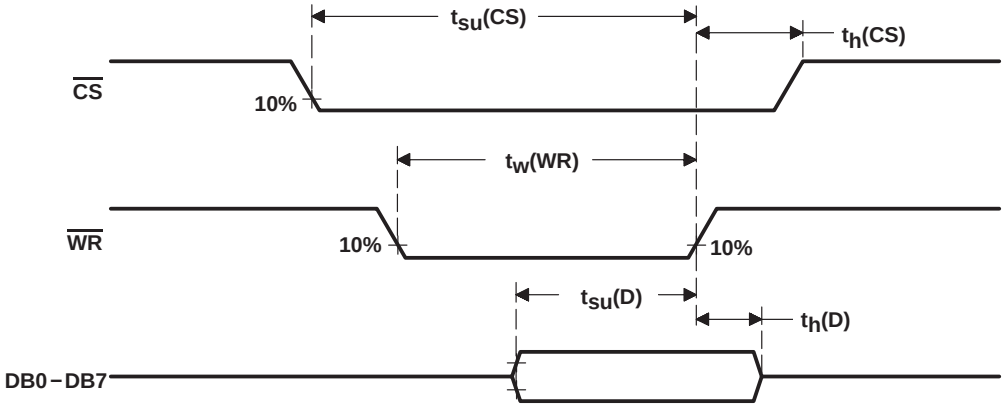

absolute maximum ratings over operating free-air temperature range (unless otherwise noted)†

Supply voltage range, V_{DD} . . . . . −0.3 V to 17 V
Voltage between R_{FB} and GND . . . . . ±25 V
Digital input voltage range, V_I . . . . . −0.3 V to V_{DD}+0.3 V
Reference voltage range, V_{ref} . . . . . ±25 V
Peak digital input current, I_I . . . . . 10 µA
Operating free-air temperature range, T_A . . . . . −55°C to 125°C
Storage temperature range, T_{stg} . . . . . −65°C to 150°C
Case temperature for 60 seconds, T_C: FK package . . . . . 260°C
Lead temperature 1,6 mm (1/16 inch) from case for 60 seconds: J package . . . . . 300°C

† Stresses beyond those listed under “absolute maximum ratings” may cause permanent damage to the device. These are stress ratings only, and functional operation of the device at these or any other conditions beyond those indicated under “recommended operating conditions” is not implied. Exposure to absolute-maximum-rated conditions for extended periods may affect device reliability.

recommended operating conditions

	V_{DD} = 5 V			V_{DD} = 15 V			UNIT
	MIN	NOM	MAX	MIN	NOM	MAX	
Supply voltage, V_{DD}	4.75	5	5.25	14.5	15	15.5	V
Reference voltage, V_{ref}		±10			±10		V
High-level input voltage, V_{IH}	2.4			13.5			V
Low-level input volage, V_{IL}			0.8			1.5	V
$\overline{CS}$ setup time, $t_{su(CS)}$	40			40			ns
$\overline{CS}$ hold time, $t_{h(CS)}$	0			0			ns
Data bus input setup time, $t_{su(D)}$	25			25			ns
Data bus input hold time, $t_{h(D)}$	10			10			ns
Pulse duration, $\overline{WR}$ low, $t_{w(WR)}$	40			40			ns
Operating free-air temperature, T_A	−55		125	−55		125	°C

electrical characteristics over recommended operating free-air temperature range, V_{ref} = 10 V, OUT1 and OUT2 at GND (unless otherwise noted)

PARAMETER			TEST CONDITIONS		V_{DD} = 5 V			V_{DD} = 15 V			UNIT
					MIN	TYP	MAX	MIN	TYP	MAX	
I_{IH}	High-level input current		$V_I = V_{DD}$	Full-range			10			10	µA
				25°C			1			1	
I_{IL}	Low-level input current		V_I = 0	Full-range			−10			−10	µA
				25°C			−1			−1	
I_{pkg}	Output leakage current	OUT1	$\overline{DB0}$−$\overline{DB7}$ at 0, $\overline{WR}$ and $\overline{CS}$ at 0 V	Full-range			±400			±200	nA
			V_{ref} = ±10 V	25°C			±50			±50	
		OUT2	$\overline{DB0}$−$\overline{DB7}$ at V_{DD}, $\overline{WR}$ and $\overline{CS}$ at 0	Full-range			±400			±200	
			V_{ref} = ±10 V	25°C			±50			±50	
I_{DD}	Supply current	Quiescent	DB0−DB7 at V_{IH}min or V_{IL}max				2			2	mA
		Standby	DB0−DB7 at 0 V or V_{DD}	Full-range			500			500	µA
				25°C			100			100	
k_{SVS}	Supply voltage sensitivity, Δgain/ΔV_{DD}		ΔV_{DD} = 10%	Full-range			0.16			0.04	%/%
				25°C		0.002	0.02		0.001	0.02	pF
C_i	Input capacitance, DB0−DB7, $\overline{WR}$, $\overline{CS}$		V_I = 0				5			5	pF
C_o	Output capacitance	OUT1	DB0−DB7 at 0, $\overline{WR}$ and $\overline{CS}$ at 0 V				30			30	pF
		OUT2					120			120	
		OUT1	DB0−DB7 at V_{DD}, $\overline{WR}$ and $\overline{CS}$ at 0 V				120			120	
		OUT2					30			30	
	Reference input impedance (REF to GND)				5		20	5		20	kΩ

operating characteristics over recommended operating free-air temperature range, V_{ref} = 10 V, OUT1 and OUT2 at GND (unless otherwise noted)

PARAMETER	TEST CONDITIONS		V_{CC} = 5 V		V_{DD} = 15 V		UNIT
			MIN	MAX	MIN	MAX	
Linearity error				±0.2		±0.2	%FSR
Gain error	See Note 1	Full range		±1.4		±0.6	%FSR
		25°C		±1		±0.5	
Settling time (to 1/2 LSB)	See Note 2			100		100	ns
Propagation delay from digital input to 90% of final analog output current	See Note 2			80		80	ns
Feedthrough at OUT1 or OUT2	V_{ref} = ±10 V (100 kHz sinewave), $\overline{WR}$ and $\overline{CS}$ at 0, DB0−DB7 at 0	Full range		0.5		0.5	%FSR
		25°C		0.25		0.25	
Temperature coefficient of gain	T_A = 25°C to t_{min} or t_{max}			±0.004		±0.001	%FSR/°C

NOTES: 1. Gain error is measured using the internal feedback resistor. Nominal Full Scale Range (FSR) = V_{ref} − 1 LSB.
2. OUT1 load = 100 Ω, C_{ext} = 13 pF, $\overline{WR}$ at 0 V, $\overline{CS}$ at 0 V, DB0−DB7 at 0 V to V_{DD} or V_{DD} to 0 V.

PRINCIPLES OF OPERATION

The AD7524M is an 8-bit multiplying D/A converter consisting of an inverted R-2R ladder, analog switches, and data input latches. Binary weighted currents are switched between the OUT1 and OUT2 bus lines, thus maintaining a constant current in each ladder leg independent of the switch state. The high-order bits are decoded and these decoded bits, through a modification in the R-2R ladder, control three equally weighted current sources. Most applications only require the addition of an external operational amplifier and a voltage reference.

The equivalent circuit for all digital inputs low is seen in Figure 1. With all digital inputs low, the entire reference current, I_{ref}, is switched to OUT2. The current source 1/256 represents the constant current flowing through the termination resistor of the R-2R ladder, while the current source I_{lkg} represents leakage currents to the substrate. The capacitances appearing at OUT1 and OUT2 are dependent upon the digital input code. With all digital inputs high, the off-state switch capacitance (30 pF maximum) appears at OUT2 and the on-state switch capacitance (120 pF maximum) appears at OUT1. With all digital inputs low, the situation is reversed as shown in Figure 1. Analysis of the circuit for all digital inputs high is similar to Figure 1; however, in this case, I_{ref} would be switched to OUT1.

Interfacing the AD7524M D/A converter to a microprocessor is accomplished via the data bus and the $\overline{CS}$ and $\overline{WR}$ control signals. When $\overline{CS}$ and $\overline{WR}$ are both low, the AD7524M analog output responds to the data activity on the DB0−DB7 data bus inputs. In this mode, the input latches are transparent and input data directly affects the analog output. When either the CS signal or WR signal goes high, the data on the DB0−DB7 inputs are latched until the $\overline{CS}$ and $\overline{WR}$ signals go low again. When $\overline{CS}$ is high, the data inputs are disabled regardless of the state of the $\overline{WR}$ signal.

The AD7524M is capable of performing 2-quadrant or full 4-quadrant multiplication. Circuit configurations for 2-quadrant or 4-quadrant multiplication are shown in Figures 2 and 3. Input coding for unipolar and bipolar operation are summarized in Tables 1 and 2, respectively.

PRINCIPLES OF OPERATION

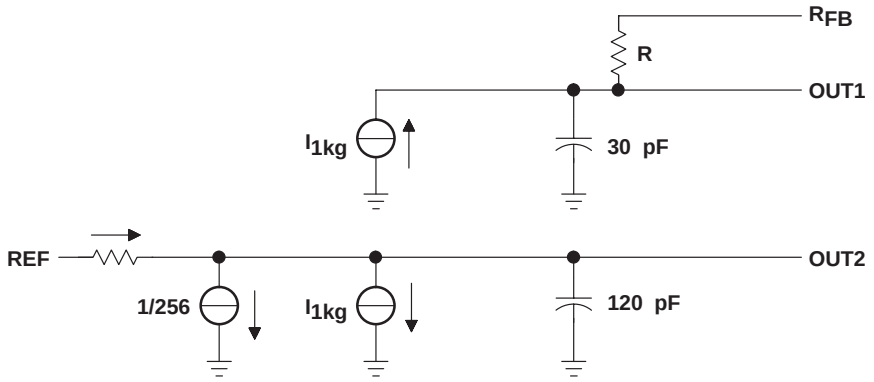

Figure 1. AD7524M Equivalent Circuit With All Digital Inputs Low

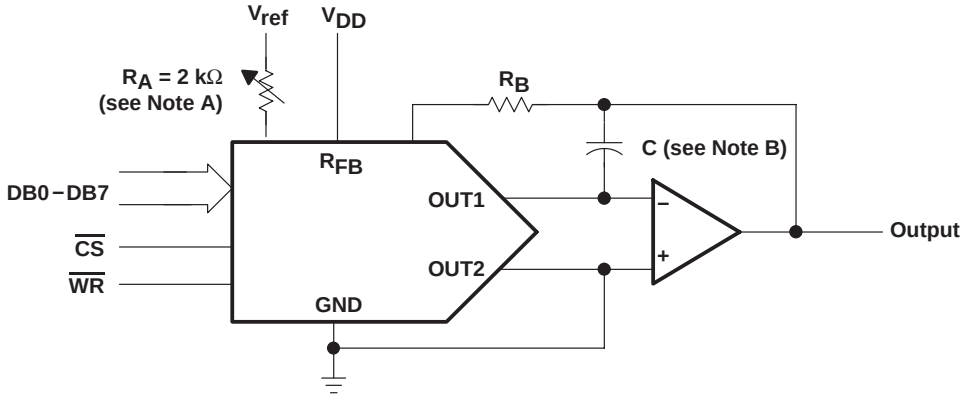

Figure 2. Unipolar Operation (2-Quadrant Multiplication)

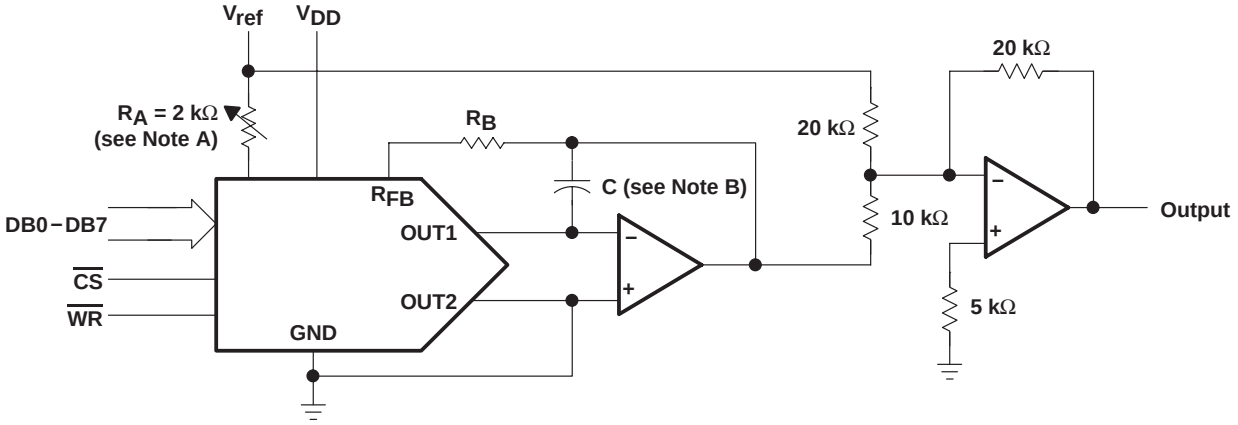

Figure 3. Bipolar Operation (4-Quadrant Operation)

NOTES: A. R_A and R_B used only if gain adjustment is required.
B. C phase compensation (10 − 15 pF) is required when using high-speed amplifiers to prevent ringing or oscillation.

PRINCIPLES OF OPERATION

Table 1. Unipolar Binary Code

DIGITAL INPUT (see NOTE 3)		ANALOG OUTPUT
MSB	LSB	
11111111		$-V_{ref}$ (255/256)
10000001		$-V_{ref}$ (129/256)
10000000		$-V_{ref}$ (128/256) = $-V_{ref}$ /2
01111111		$-V_{ref}$ (127/256)
00000001		$-V_{ref}$ (1/256)
00000000		0

NOTES: 3. LSB = 1/256 (V_{ref}).

Table 2. Bipolar (Offset Binary) Code

DIGITAL INPUT (see NOTE 4)		ANALOG OUTPUT
MSB	LSB	
11111111		V_{ref} (127/128)
10000001		V_{ref} (128)
10000000		0
01111111		$-V_{ref}$ (128)
00000001		$-V_{ref}$ (127/128)
00000000		$-V_{ref}$

NOTES: 4. LSB = 1/128 (V_{ref}).

microprocessor interfaces

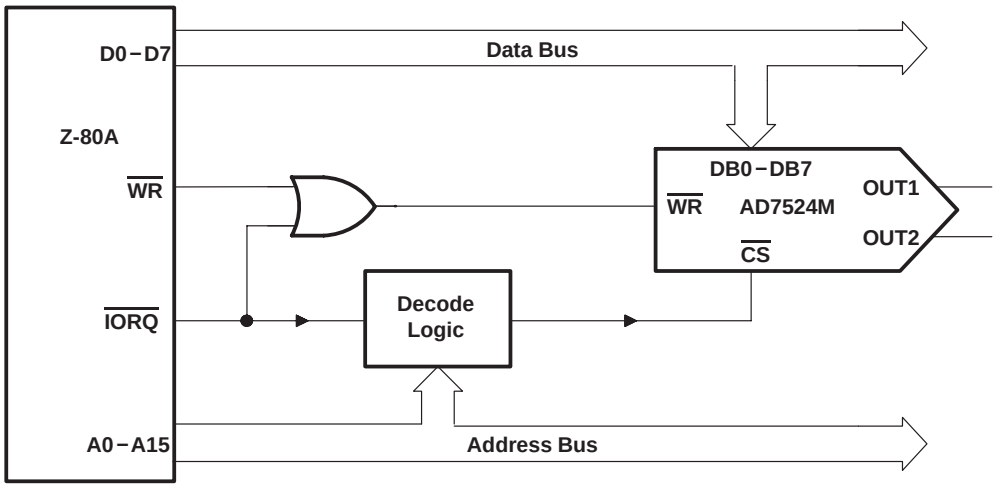

Figure 4. AD7524M−Z-80A Interface

PRINCIPLES OF OPERATION

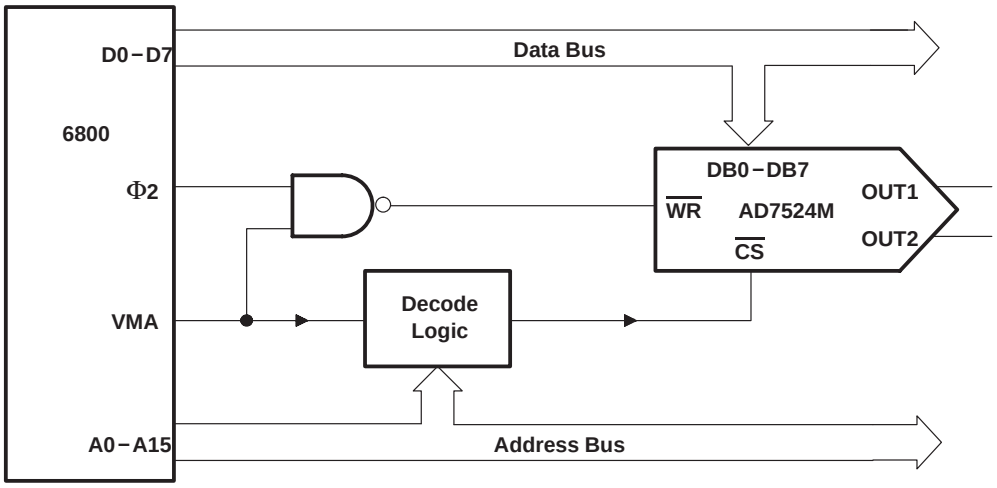

Figure 5. AD7524M−6800 Interface

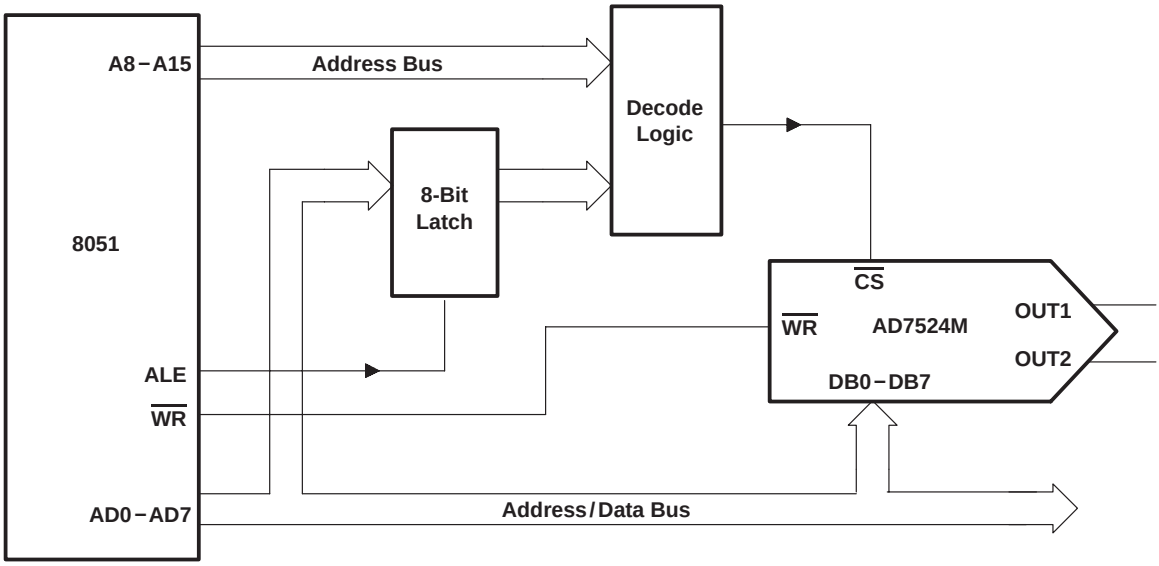

Figure 6. AD7524M−8051 Interface

PACKAGING INFORMATION

Orderable Device	Status [1]	Package Type	Package Drawing	Pins	Package Qty	Eco Plan [2]	Lead/Ball Finish	MSL Peak Temp [3]
5962-87700012A	OBSOLETE	LCCC	FK	20		TBD	Call TI	Call TI
5962-8770001EA	OBSOLETE	CDIP	J	16		TBD	Call TI	Call TI
AD7524MFKB	OBSOLETE	LCCC	FK	20		TBD	Call TI	Call TI
AD7524MJ	OBSOLETE	CDIP	J	16		TBD	Call TI	Call TI
AD7524MJB	OBSOLETE	CDIP	J	16		TBD	Call TI	Call TI

[1] The marketing status values are defined as follows:
ACTIVE: Product device recommended for new designs.
LIFEBUY: TI has announced that the device will be discontinued, and a lifetime-buy period is in effect.
NRND: Not recommended for new designs. Device is in production to support existing customers, but TI does not recommend using this part in a new design.
PREVIEW: Device has been announced but is not in production. Samples may or may not be available.
OBSOLETE: TI has discontinued the production of the device.

[2] Eco Plan - The planned eco-friendly classification: Pb-Free (RoHS) or Green (RoHS & no Sb/Br) - please check http://www.ti.com/productcontent for the latest availability information and additional product content details.
TBD: The Pb-Free/Green conversion plan has not been defined.
Pb-Free (RoHS): TI's terms "Lead-Free" or "Pb-Free" mean semiconductor products that are compatible with the current RoHS requirements for all 6 substances, including the requirement that lead not exceed 0.1% by weight in homogeneous materials. Where designed to be soldered at high temperatures, TI Pb-Free products are suitable for use in specified lead-free processes.
Green (RoHS & no Sb/Br): TI defines "Green" to mean Pb-Free (RoHS compatible), and free of Bromine (Br) and Antimony (Sb) based flame retardants (Br or Sb do not exceed 0.1% by weight in homogeneous material)

[3] MSL, Peak Temp. -- The Moisture Sensitivity Level rating according to the JEDEC industry standard classifications, and peak solder temperature.

Important Information and Disclaimer: The information provided on this page represents TI's knowledge and belief as of the date that it is provided. TI bases its knowledge and belief on information provided by third parties, and makes no representation or warranty as to the accuracy of such information. Efforts are underway to better integrate information from third parties. TI has taken and continues to take reasonable steps to provide representative and accurate information but may not have conducted destructive testing or chemical analysis on incoming materials and chemicals. TI and TI suppliers consider certain information to be proprietary, and thus CAS numbers and other limited information may not be available for release.

In no event shall TI's liability arising out of such information exceed the total purchase price of the TI part(s) at issue in this document sold by TI to Customer on an annual basis.

J (R–GDIP–T**) CERAMIC DUAL IN–LINE PACKAGE

14 LEADS SHOWN

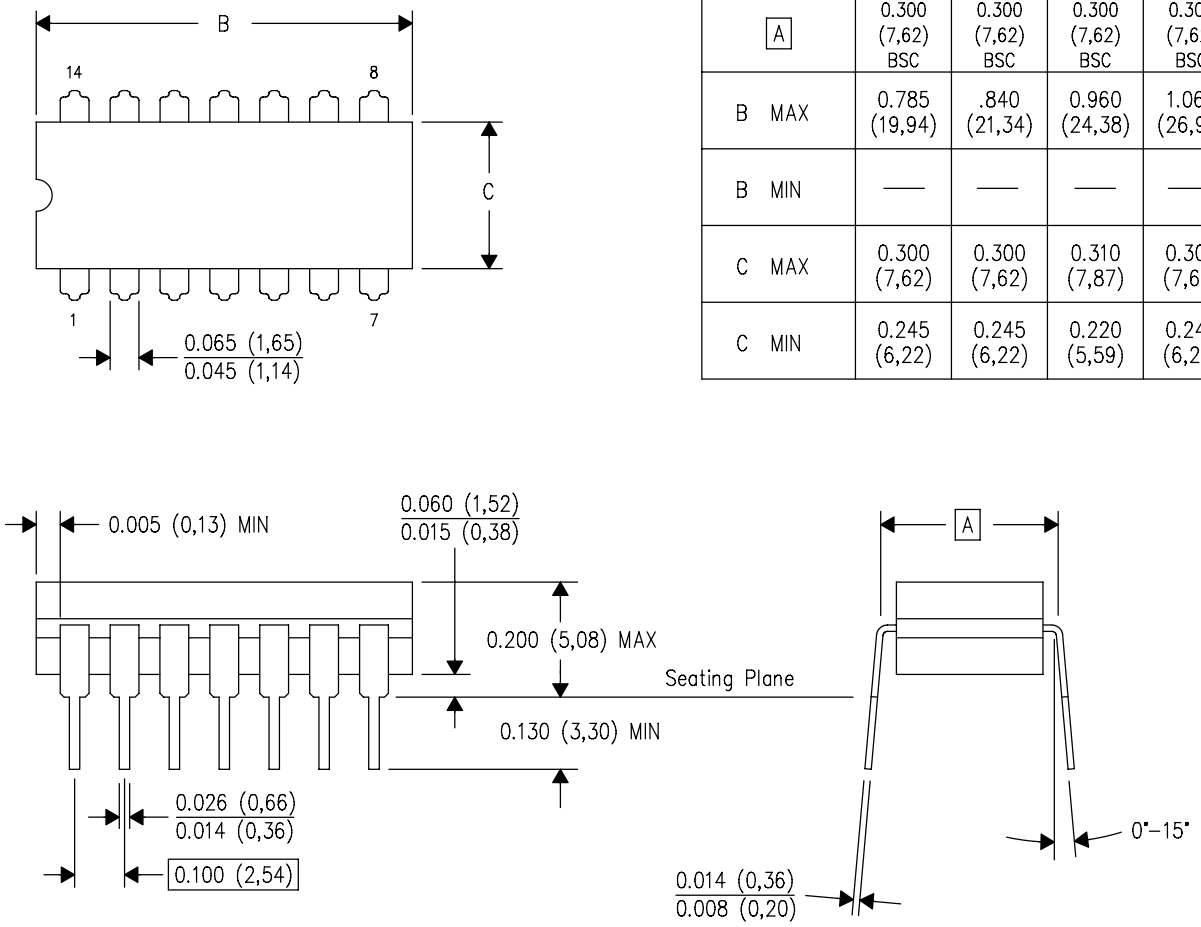

DIM \ PINS **	14	16	18	20
A	0.300 (7,62) BSC	0.300 (7,62) BSC	0.300 (7,62) BSC	0.300 (7,62) BSC
B MAX	0.785 (19,94)	.840 (21,34)	0.960 (24,38)	1.060 (26,92)
B MIN	—	—	—	—
C MAX	0.300 (7,62)	0.300 (7,62)	0.310 (7,87)	0.300 (7,62)
C MIN	0.245 (6,22)	0.245 (6,22)	0.220 (5,59)	0.245 (6,22)

4040083/F 03/03

NOTES:
- A. All linear dimensions are in inches (millimeters).
- B. This drawing is subject to change without notice.
- C. This package is hermetically sealed with a ceramic lid using glass frit.
- D. Index point is provided on cap for terminal identification only on press ceramic glass frit seal only.
- E. Falls within MIL STD 1835 GDIP1–T14, GDIP1–T16, GDIP1–T18 and GDIP1–T20.

FK (S-CQCC-N**)

LEADLESS CERAMIC CHIP CARRIER

28 TERMINAL SHOWN

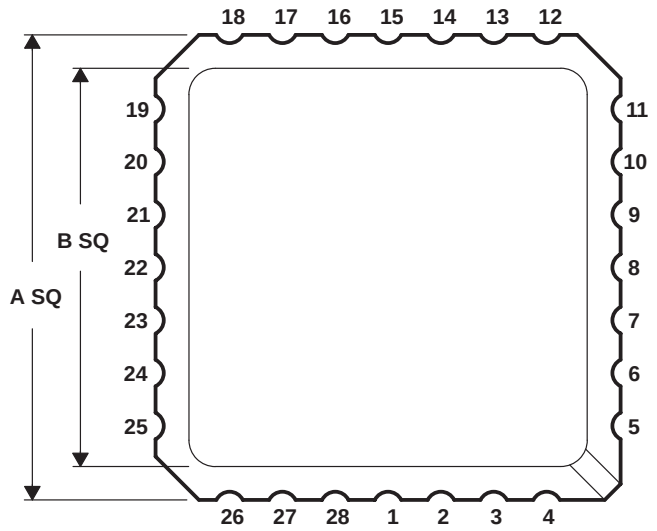

NO. OF TERMINALS **	A		B	
	MIN	MAX	MIN	MAX
20	0.342 (8,69)	0.358 (9,09)	0.307 (7,80)	0.358 (9,09)
28	0.442 (11,23)	0.458 (11,63)	0.406 (10,31)	0.458 (11,63)
44	0.640 (16,26)	0.660 (16,76)	0.495 (12,58)	0.560 (14,22)
52	0.739 (18,78)	0.761 (19,32)	0.495 (12,58)	0.560 (14,22)
68	0.938 (23,83)	0.962 (24,43)	0.850 (21,6)	0.858 (21,8)
84	1.141 (28,99)	1.165 (29,59)	1.047 (26,6)	1.063 (27,0)

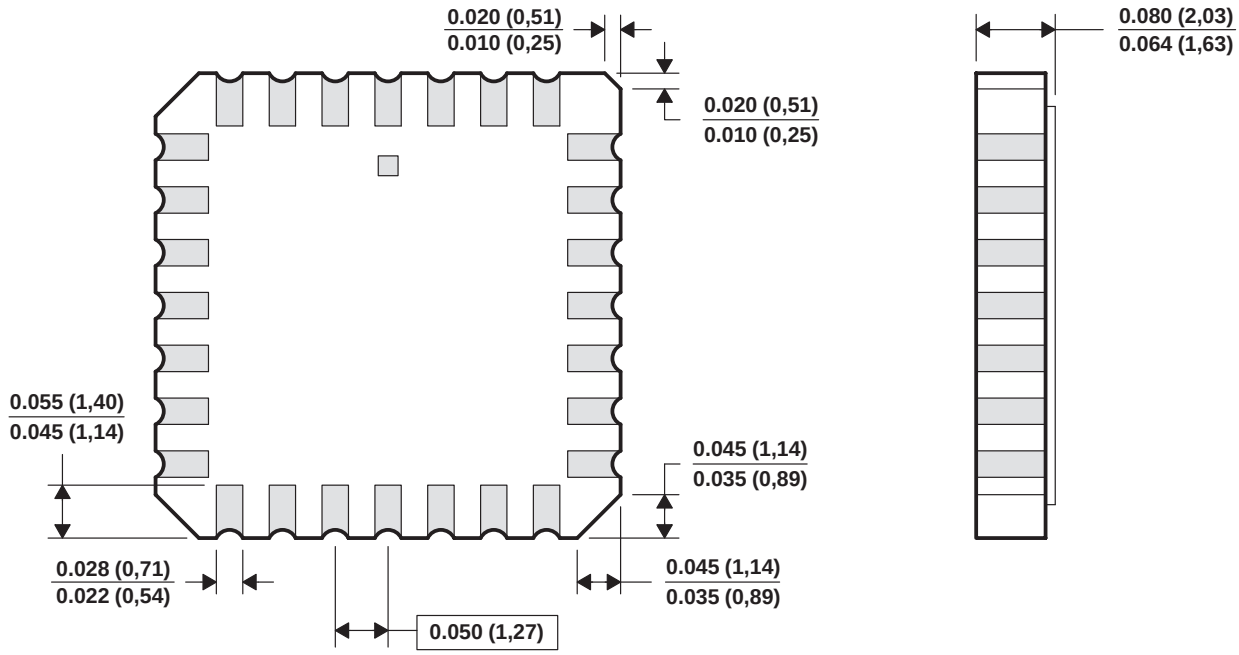

4040140/D 10/96

NOTES:
A. All linear dimensions are in inches (millimeters).
B. This drawing is subject to change without notice.
C. This package can be hermetically sealed with a metal lid.
D. The terminals are gold plated.
E. Falls within JEDEC MS-004

IMPORTANT NOTICE

Texas Instruments Incorporated and its subsidiaries (TI) reserve the right to make corrections, modifications, enhancements, improvements, and other changes to its products and services at any time and to discontinue any product or service without notice. Customers should obtain the latest relevant information before placing orders and should verify that such information is current and complete. All products are sold subject to TI's terms and conditions of sale supplied at the time of order acknowledgment.

TI warrants performance of its hardware products to the specifications applicable at the time of sale in accordance with TI's standard warranty. Testing and other quality control techniques are used to the extent TI deems necessary to support this warranty. Except where mandated by government requirements, testing of all parameters of each product is not necessarily performed.

TI assumes no liability for applications assistance or customer product design. Customers are responsible for their products and applications using TI components. To minimize the risks associated with customer products and applications, customers should provide adequate design and operating safeguards.

TI does not warrant or represent that any license, either express or implied, is granted under any TI patent right, copyright, mask work right, or other TI intellectual property right relating to any combination, machine, or process in which TI products or services are used. Information published by TI regarding third-party products or services does not constitute a license from TI to use such products or services or a warranty or endorsement thereof. Use of such information may require a license from a third party under the patents or other intellectual property of the third party, or a license from TI under the patents or other intellectual property of TI.

Reproduction of TI information in TI data books or data sheets is permissible only if reproduction is without alteration and is accompanied by all associated warranties, conditions, limitations, and notices. Reproduction of this information with alteration is an unfair and deceptive business practice. TI is not responsible or liable for such altered documentation. Information of third parties may be subject to additional restrictions.

Resale of TI products or services with statements different from or beyond the parameters stated by TI for that product or service voids all express and any implied warranties for the associated TI product or service and is an unfair and deceptive business practice. TI is not responsible or liable for any such statements.

TI products are not authorized for use in safety-critical applications (such as life support) where a failure of the TI product would reasonably be expected to cause severe personal injury or death, unless officers of the parties have executed an agreement specifically governing such use. Buyers represent that they have all necessary expertise in the safety and regulatory ramifications of their applications, and acknowledge and agree that they are solely responsible for all legal, regulatory and safety-related requirements concerning their products and any use of TI products in such safety-critical applications, notwithstanding any applications-related information or support that may be provided by TI. Further, Buyers must fully indemnify TI and its representatives against any damages arising out of the use of TI products in such safety-critical applications.

TI products are neither designed nor intended for use in military/aerospace applications or environments unless the TI products are specifically designated by TI as military-grade or "enhanced plastic." Only products designated by TI as military-grade meet military specifications. Buyers acknowledge and agree that any such use of TI products which TI has not designated as military-grade is solely at the Buyer's risk, and that they are solely responsible for compliance with all legal and regulatory requirements in connection with such use.

TI products are neither designed nor intended for use in automotive applications or environments unless the specific TI products are designated by TI as compliant with ISO/TS 16949 requirements. Buyers acknowledge and agree that, if they use any non-designated products in automotive applications, TI will not be responsible for any failure to meet such requirements.

Following are URLs where you can obtain information on other Texas Instruments products and application solutions:

Products		**Applications**	
Amplifiers	amplifier.ti.com	Audio	www.ti.com/audio
Data Converters	dataconverter.ti.com	Automotive	www.ti.com/automotive
DLP® Products	www.dlp.com	Broadband	www.ti.com/broadband
DSP	dsp.ti.com	Digital Control	www.ti.com/digitalcontrol
Clocks and Timers	www.ti.com/clocks	Medical	www.ti.com/medical
Interface	interface.ti.com	Military	www.ti.com/military
Logic	logic.ti.com	Optical Networking	www.ti.com/opticalnetwork
Power Mgmt	power.ti.com	Security	www.ti.com/security
Microcontrollers	microcontroller.ti.com	Telephony	www.ti.com/telephony
RFID	www.ti-rfid.com	Video & Imaging	www.ti.com/video
RF/IF and ZigBee® Solutions	www.ti.com/lprf	Wireless	www.ti.com/wireless

Mailing Address: Texas Instruments, Post Office Box 655303, Dallas, Texas 75265
Copyright © 2009, Texas Instruments Incorporated