THIS DRAWING IS UNPUBLISHED. RELEASED FOR PUBLICATION 2008
© COPYRIGHT 2008 - ALL RIGHTS RESERVED.

LOC	DIST
A1	-

REVISIONS

P	LTR	DESCRIPTION	DATE	DWN	APVD
	N3	NEW VERISON OF GOLD CONTACTS PRERMITTED.	18MAY2011	Kirs	Mair
	N4	OPTIONAL to note 8 TTD added. (area A3)	29JUN2011	Kirs	Mair
	N5	PRODUCT SPEC CORRECTED	23JUN2014	Ho.	Eder
	N6	ECR-15-012070	13AUG2015	JBJH	BK

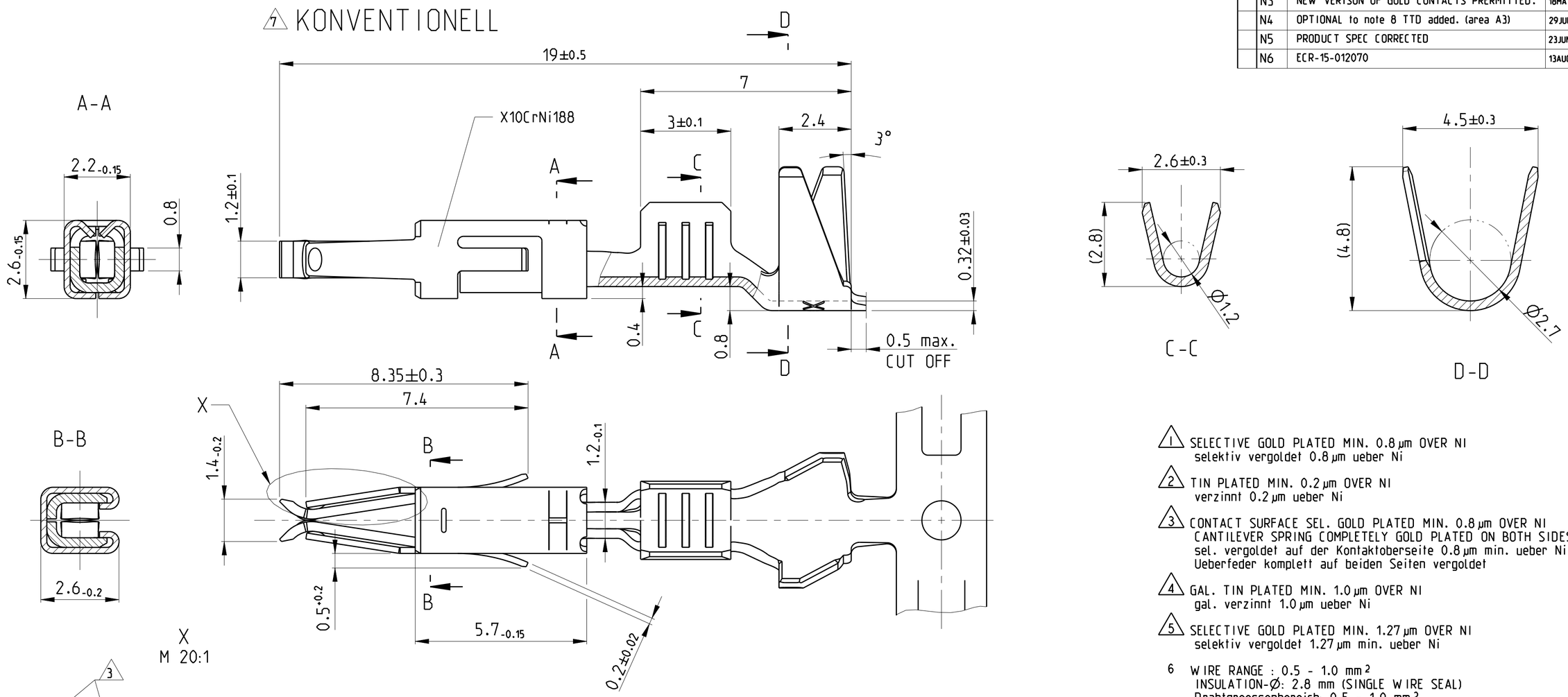

1 SELECTIVE GOLD PLATED MIN. 0.8 µm OVER NI
selektiv vergoldet 0.8 µm ueber Ni

2 TIN PLATED MIN. 0.2 µm OVER NI
verzinnt 0.2 µm ueber Ni

3 CONTACT SURFACE SEL. GOLD PLATED MIN. 0.8 µm OVER NI
CANTILEVER SPRING COMPLETELY GOLD PLATED ON BOTH SIDES
sel. vergoldet auf der Kontaktoberseite 0.8 µm min. ueber Ni
Ueberfeder komplett auf beiden Seiten vergoldet

4 GAL. TIN PLATED MIN. 1.0 µm OVER NI
gal. verzinnt 1.0 µm ueber Ni

5 SELECTIVE GOLD PLATED MIN. 1.27 µm OVER NI
selektiv vergoldet 1.27 µm min. ueber Ni

6 WIRE RANGE : 0.5 - 1.0 mm²
INSULATION-Ø: 2.8 mm (SINGLE WIRE SEAL)
Drahtgroessenbereich: 0.5 - 1.0 mm²
Isolations-Ø: 2.8 mm (Einzeldichtung)

VERSION	SURFACE / Oberflaeche	MATERIAL	PART NO	REV
8 7	5 2	CuFe2	962876-7	B
8 7	3 4 2	CuSn4	962876-6	N
8 7	1 2	CuFe2	962876-5	N
8 7	1 2	CuSn4	962876-3	N
8	PRETIN / vorverzinnt	CuFe2	962876-2	N
8	PRETIN / vorverzinnt	CuSn4	962876-1	N

THIS DRAWING IS A CONTROLLED DOCUMENT.

DIMENSIONS: mm

TOLERANCES UNLESS OTHERWISE SPECIFIED:
0 PLC ±
1 PLC ±
2 PLC ± ±0.2
3 PLC ±
4 PLC ±
ANGLES ±2°
FINISH -

MATERIAL -

DWN R.Hofer 05-JAN-89
CHK L. Nix 05-APR-89
APVD M. Bleicher 25-JUN-08
PRODUCT SPEC 108-18055
APPLICATION SPEC 114-18081
WEIGHT 0.3 g

TE Connectivity

NAME
MICRO TIMER 2 CONTACT
WITH DOUBLE LOCKING LANCE
mit doppelter Rastfeder

SIZE	CAGE CODE	DRAWING NO	RESTRICTED TO
A2	00779	C-962876	-

Customer Drawing
SCALE 10:1 SHEET 1 OF 1 REV N6