THIS DRAWING IS UNPUBLISHED. RELEASED FOR PUBLICATION SEP ,2004.
© COPYRIGHT 2004 By – ALL RIGHTS RESERVED.

LOC	DIST
J	

REVISIONS

P	LTR	DESCRIPTION	DATE	DWN	APVD
	R	REVISED PER ECO-12-012349	28MAR13	BL	AC

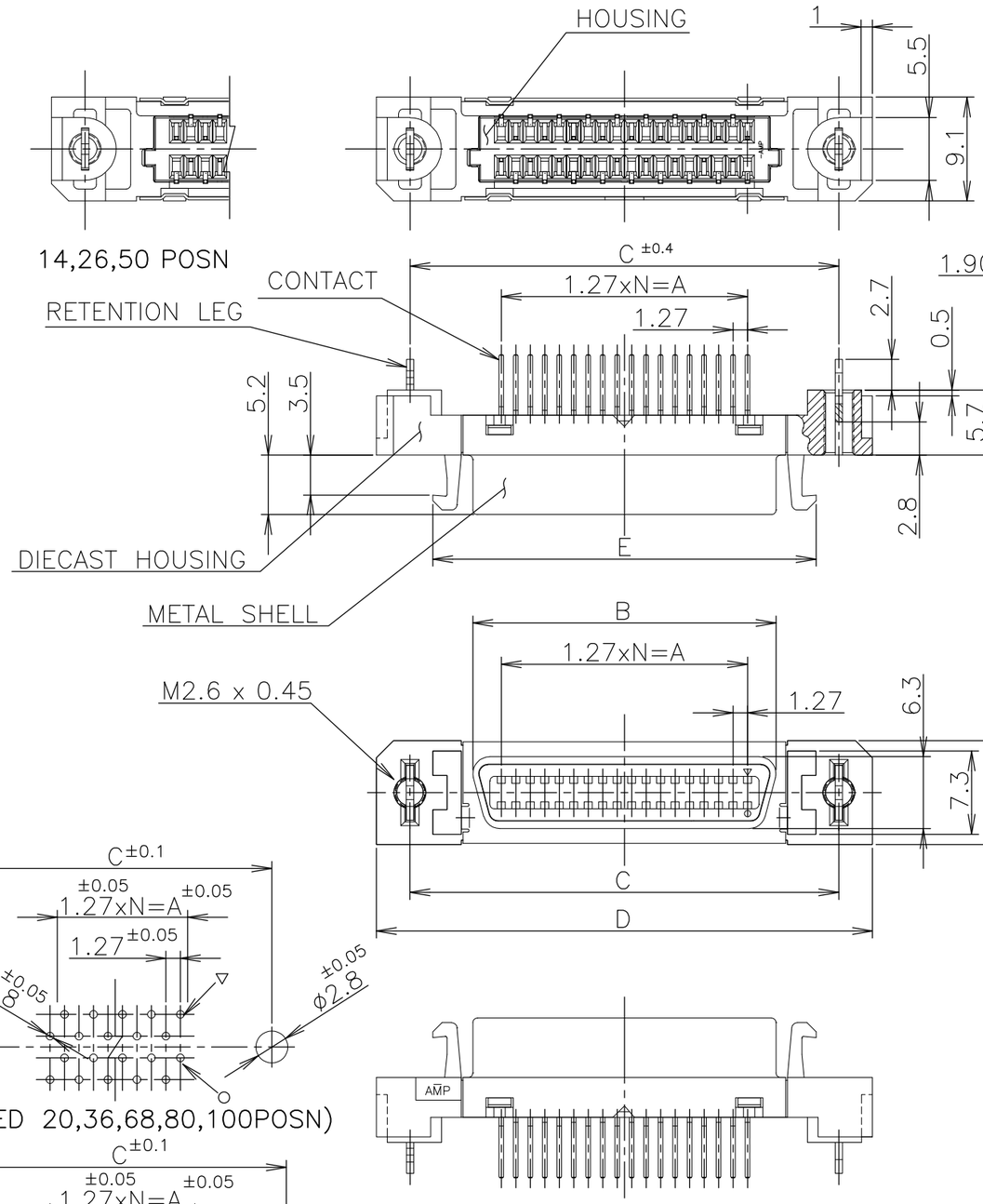

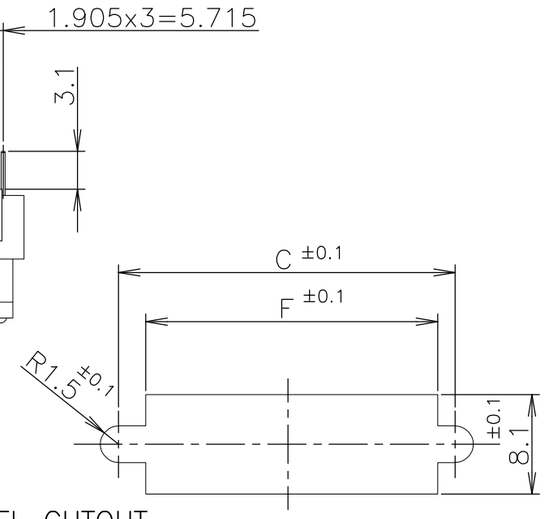

PANEL CUTOUT
(THK; 2mm MAX.)
FIG-2

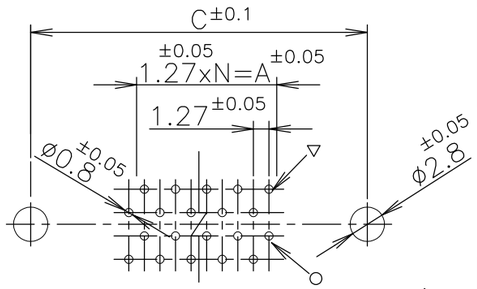

(APPLIED 20,36,68,80,100POSN)

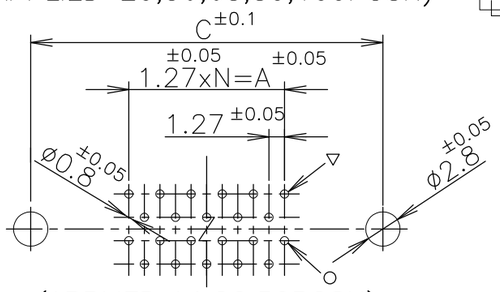

(APPLIED 14,26,50POSN)
RECOMMEND P.W.B HOLE LAYOUT
(CONNECTOR MOUNTING SIDE)
FIG-1

1 USED SCREW SIZE; M2.6 PANHEAD SCREW.
2 CONNECTOR TO BE MATED; 175677,175751
3 MATERIAL AND FINISH;
* CONTACT; PHOS-BRONZE
FIN.; AU PLATING OVER Ni UNDER PLATING ON CONTACT AREA.
TIN PLATING OVER Ni UNDER PLATING ON SOLDER TINE AREA.
* METAL SHELL; STEEL
FIN.; Ni PLATING OVER COPPER UNDER PLATING.
* DIECAST HOUSING; ZINC
FIN.; Ni PLATING OVER COPPER UNDER PLATING.
* HOUSING; THERMOPLASTIC, UL94V-0, BLACK
* RETENTION LEG; BRASS,
TIN PLATING WITH OVER NICKEL PLATING OVER ALL
4 RECOMMEND P.W.B THICKNESS; 1.6mm
3 OBSOLETE

GOLD PLATING	N	F	E	D	C	B	A	POSN	PART NO.
0.00076 3	39	61.90	61.55	71.45	65.55	54.53	49.53	80	3-5917334-0
	49	74.60	74.25	84.15	78.25	67.23	62.23	100	2-5917334-9
	~~33~~	~~54.20~~	~~53.93~~	~~63.83~~	~~57.93~~	~~46.91~~	~~41.91~~	~~68~~	~~2-5917334-8~~
	24	42.80	42.50	52.40	46.50	35.48	30.48	50	2-5917334-7
	17	33.90	33.61	43.51	37.61	26.59	21.59	36	2-5917334-5
	12	27.60	27.26	37.16	31.26	20.24	15.24	26	2-5917334-4
	9	23.80	23.45	33.35	27.45	16.43	11.43	20	2-5917334-2
	6	19.90	19.64	29.54	23.64	12.62	7.62	14	2-5917334-1
0.0003	39	61.90	61.55	71.45	65.55	54.53	49.53	80	1-5917334-0
	49	74.60	74.25	84.15	78.25	67.23	62.23	100	5917334-9
	33	54.20	53.93	63.83	57.93	46.91	41.91	68	5917334-8
	24	42.80	42.50	52.40	46.50	35.48	30.48	50	5917334-7
	17	33.90	33.61	43.51	37.61	26.59	21.59	36	5917334-5
	12	27.60	27.26	37.16	31.26	20.24	15.24	26	5917334-4
	9	23.80	23.45	33.35	27.45	16.43	11.43	20	5917334-2
	6	19.90	19.64	29.54	23.64	12.62	7.62	14	5917334-1

LEAD FREE

THIS DRAWING IS A CONTROLLED DOCUMENT.

DIMENSIONS: mm

TOLERANCES UNLESS OTHERWISE SPECIFIED:
0 PLC ± 0.2
1 PLC ± 0.2
2 PLC ± 0.2
3 PLC ± 0.2
4 PLC ± 0.2
ANGLES ± 3°

MATERIAL SEE NOTE 3
FINISH SEE NOTE 3

DWN COREL WANG 01SEP04
CHK STEVEN YAO 01SEP04
APVD I.ENOMOTO 01SEP04
PRODUCT SPEC 108-5288
APPLICATION SPEC
WEIGHT

TE Connectivity

NAME
REC HEADER ASSY, VERTICAL
W/RETENTION LEG
CHAMP .050 SERIES (II) STD-TYPE (M2.6)

SIZE	CAGE CODE	DRAWING NO	RESTRICTED TO
A3	00779	C-5917334	

CUSTOMER DRAWING | SCALE 2:1 | SHEET 1 OF 1 | REV R