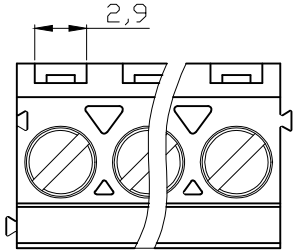

Order code
A-TB500-VJxxH-x

- Insulator Color option
  - Blank Green
  - OG Orange ③
- Pin count

Material

1.Terminal housing: Thermoplastic (UL94V-0), Color as showed in order code
2.Clamp:Brass, Ni plated
3.Wire guard solder pin: Brass, tin plated
4.Terminal screw:Steel Zinc plating"-"slot type

Electrical cULus VDE
Voltage rating: 300VAC / 450VAC
Current rating: 20A / 24A
Wire range: 0.2-2.5mm^2
Solid wire(AWG): 12-30
Stranded wire(AWG): 12-30
Torque: 3.5 Lb-In / 0.5 N.m
Screw:M3
Wire strip length:6-7mm
Withstanding Voltage: 1.6KV / 2.5KV
Operating temperature: -40°C to +115°C
Soldering temperature: 250°C±10°C/5 Sec
Safety Approval: cULus VDE

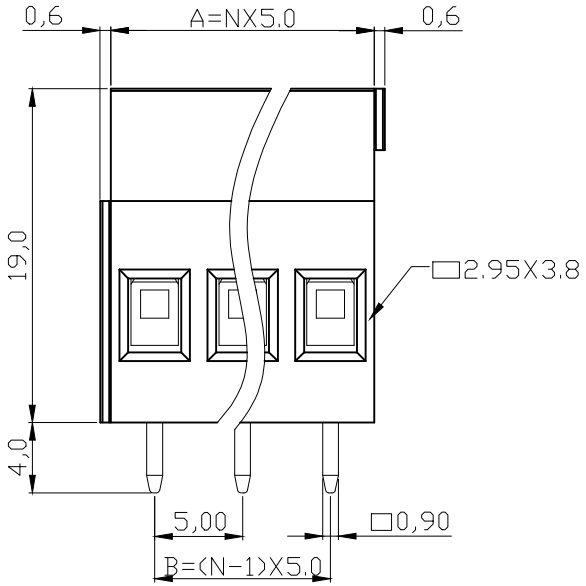

N=Number of contacts

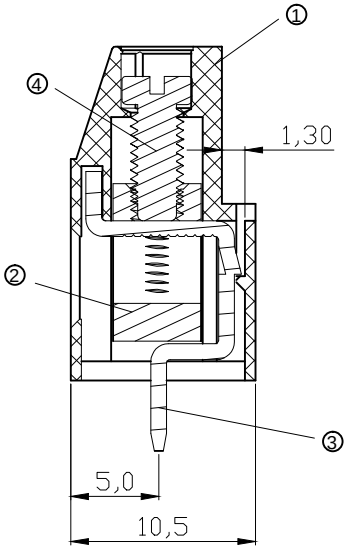

Poles	DIM A&B
2-4P	±0,15
5-8P	±0,25
9-16P	±0,35
17-24P	±0,40

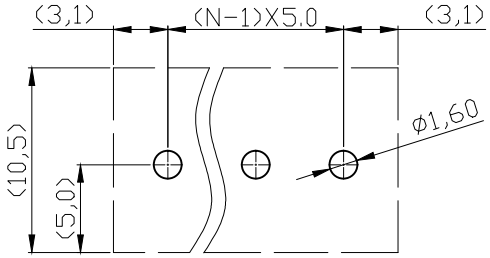

P.C.B LAYOUT

RoHS compliant
Unit: mm

② File No.: E349947

Scale	1:1
TOLERANCE	
X.	±0.50
X.X	±0.30
X.XX	±0.10
DIM	TOL
X.°	±1°
X.X°	±X°
Angle	TOL

Id.	Modification	Date	Name
③	Add Orange type of insulator	30.07.2019	Xavier
②	Add UL	18.04.2016	Joanna
①	Drawn	27.05.2009	Dean

	Date	Name
Drawn	27.05.2009	Dean
Approved	18.04.2016	Joanna

ASSMANN wsw components

Customer-No.

ASSMANN WSW-No.
A-TB500-VJxxH-x

Drawing-No.
ASS 3524 CO

rev03

Replace

Sheet 1/1

SV4731