DRAWING MADE IN THIRD ANGLE PROJECTION

THIS DRAWING IS UNPUBLISHED. RELEASED FOR PUBLICATION ,19 .

© COPYRIGHT 19 BY AMP INCORPORATED, HARRISBURG, PA. ALL INTERNATIONAL RIGHTS RESERVED. AMP PRODUCTS MAY BE COVERED BY U.S. AND FOREIGN PATENTS AND/OR PATENTS PENDING.

LOC	DIST
AJ	16

P	F	ZONE	LTR	DESCRIPTION	DATE	APPROVED
			D	REV PER 0G30-0431-98	28OCT98	MO

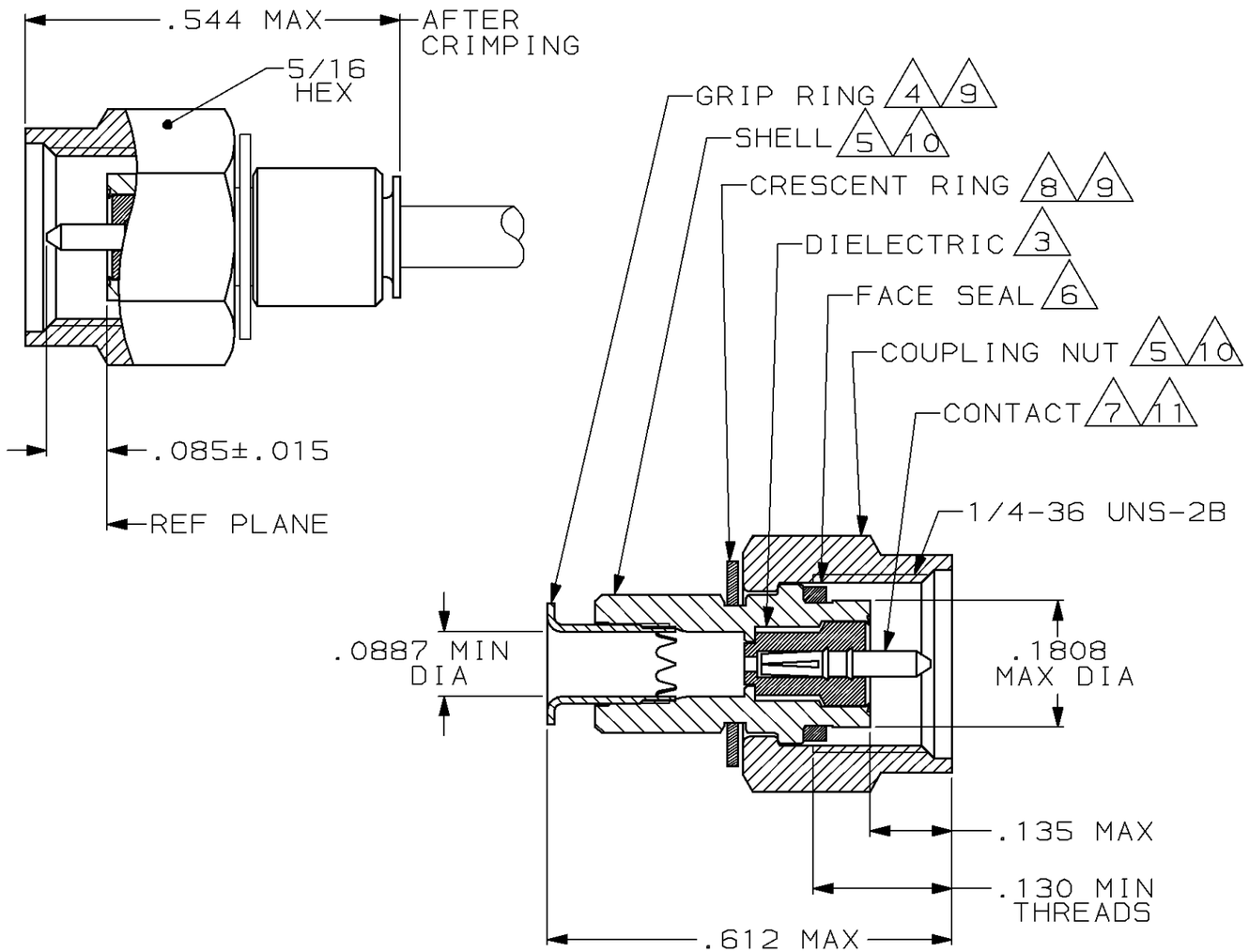

1. FOR USE WITH: RG-405/U, .086 SEMI-RIGID CABLE
2. SEE I.S. 6788

3. PTFE PER ASTM D1710
4. BRASS PER ASTM-B-36
5. STAINLESS STEEL PER ASTM-A-582
6. SILICONE RUBBER PER ZZ-R-765
7. BERYLLIUM COPPER PER ASTM-B-197
8. BERYLLIUM COPPER, ALLOY #25
9. NICKEL PL PER QQ-N-290
10. PASSIVATION PER ASTM A967
11. GOLD PL PER MIL-G-45204

12. 00779 M39012/79-3307
13. .500 MIN LENGTH OF STRAIGHT CABLE REQUIRED TO APPLY THE CONNECTOR

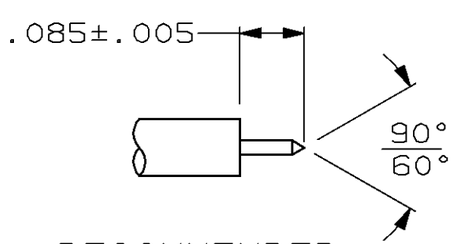

RECOMMENDED STRIP LENGTH

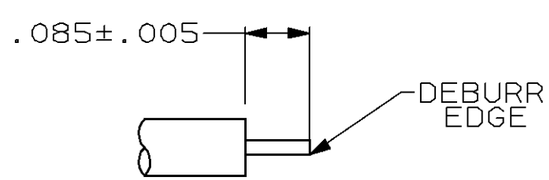

OPTIONAL STRIP LENGTH

228639-1

PART NO

UNLESS OTHERWISE SPECIFIED DIMENSIONS ARE IN INCHES
TOLERANCES ON:
2 PL DEC ±
3 PL DEC ±
ANGLES ±

MATERIAL 3 THRU 8

FINISH 9 THRU 11

DR	M.SNEED	3-17-87
CHK	D.HEIDE	3-17-87
APPD	M.WALMSLEY	3-17-87
APPD	M.SNEED	3-17-87

PRODUCT SPEC 108-12055

APPLICATION SPEC

WEIGHT

AMP INCORPORATED
Harrisburg, Pa. 17105

NAME PLUG, MIL-F, SERIES SMA

SIZE	FSCM NO	DRAWING NO
B	00779	228639-1

SCALE 5:1 SHEET 1 OF 1

CUSTOMER DRAWING

AMP 1470-15 REV 10-84

28-OCT-98 15:12:35 amp06572 /home/amp06572/edmmod