molex
one company › a world of innovation

This document was generated on 05/18/2011

PLEASE CHECK WWW.MOLEX.COM FOR LATEST PART INFORMATION

Part Number: 0522072590

Status: Planned for Obsolescence

Description: 1.00mm (.039") SMT, Right Angle, ZIF, Top Contact Style Receptacle, 25 Circuits

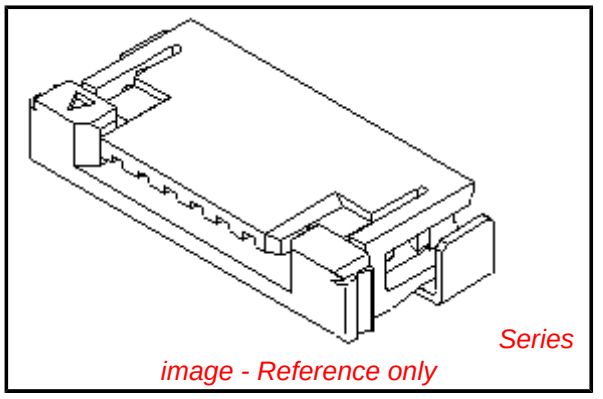

Documents:

3D Model
Drawing (PDF)
Product Specification PS-52207-007 (PDF)
RoHS Certificate of Compliance (PDF)

Agency Certification

CSA	LR19980
UL	E29179

General

Product Family	FFC/FPC Connectors
Series	52207
Product Name	N/A

Physical

Circuits (Loaded)	25
Contact Position	Top
Durability (mating cycles max)	10
Entry Angle	90° Angle
Flammability	94V-0
Mated Height	2.70mm (.106")
Material - Metal	Phosphor Bronze
Material - Plating Mating	Tin-Lead
Material - Plating Termination	Tin-Lead
Number of Rows	1
Orientation	Right Angle
PC Tail Length	2.00mm (.079")
PCB Locator	No
PCB Retention	None
Packaging Type	Embossed Tape on Reel
Pitch - Mating Interface	1.00mm (.039")
Pitch - Termination Interface	1.00mm (.039")
Plating min - Mating	3.048µm (120µ")
Plating min - Termination	3.048µm (120µ")
Polarized to PCB	No
Stackable	No
Surface Mount Compatible (SMC)	N/A
Temperature Range - Operating	-20°C to +85°C
Termination Interface: Style	Surface Mount
Wire/Cable Type	FFC/FPC

Electrical

Current - Maximum per Contact	1A
Voltage - Maximum	125V

Solder Process Data

Replacement RoHS Compliant Part Number	0522072585

Material Info

Reference - Drawing Numbers

Product Specification	PS-52207-007, RPS-52207-001, RPS-52207-002, RPS-52207-003, RPS-52207-004, RPS-52207-005, RPS-52207-006, RPS-52207-007, RPS-52207-008,

EU RoHS
Not RoHS Compliant

China RoHS

REACH SVHC
Contains SVHC: No

Low-Halogen Status
Not Low-Halogen

Need more information on product environmental compliance?

Email productcompliance@molex.com
For a multiple part number RoHS Certificate of Compliance, click here

Please visit the Contact Us section for any non-product compliance questions.

Search Parts in this Series
52207Series

	RPS-52207-011, RPS-52207-012, RPS-52207-013, RPS-52207-015, RPS-52207-016, RPS-52207-042, RPS-52207-045, RPS-52207-046, RPS-52207-048, RPS-52207-049, RPS-52207-053, RPS-52207-055, RPS-52207-056, RPS-52207-058, RPS-52207-060, RPS-52207-061, RPS-52207-062, RPS-52207-066, RPS-52207-071, RPS-52207-077, RPS-52207-085
Sales Drawing	SD-52207-**17, SD-52207-**90

This document was generated on 05/18/2011

PLEASE CHECK WWW.MOLEX.COM FOR LATEST PART INFORMATION