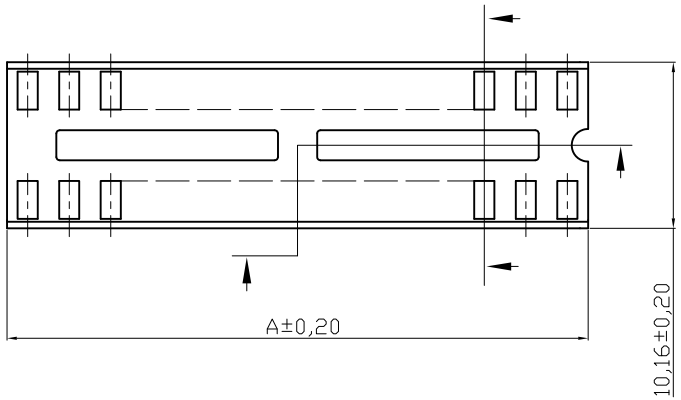

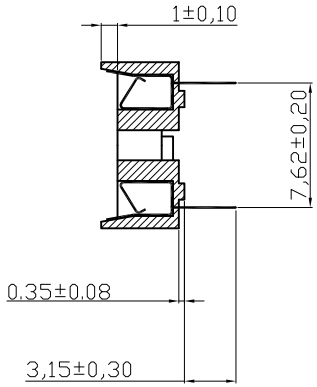

MATERIAL:

Contact :
Phosphor Bronze thickness 0.15mm
Plating :
Contact Plating, Tin plated 60u"~80u"
(Lead free plating)
Insulator : PBT-4830 , UL 94V-0

SPECIFICATIONS:

Current Rating : 1A
Dielectric withstanding Voltage : 1000v RMS/minute
Insulator resistance : 5000 Megohms min.
Contact resistance : 20 milliohms initial
30 milliohms after test.
Operating temperatures : -55°c to 85°c
Insertion force : 340g(12 oz) max.per contact.
Withdrawal force : 80g(2.82 oz) min.per contact

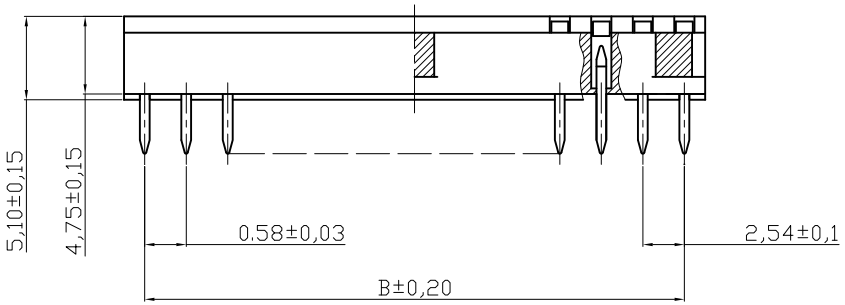

CKT	A±0.20	B±0.20
24	30.48	27.94

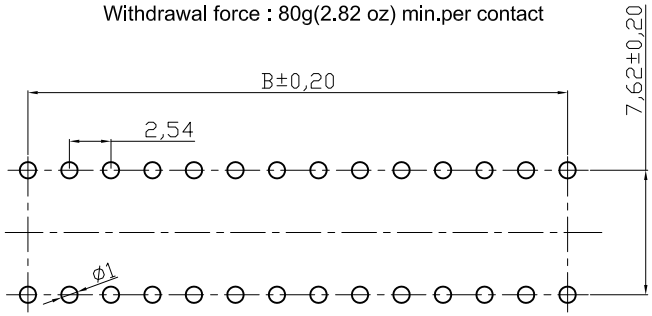

PCB LAYOUT

RoHS compliant
Unit: mm

Scale	Free
TOLERANCE	
X.	±X
X.X	±X
X.XX	±X
DIM	TOL
X.°	±X°
X.X°	±X°
Angle	TOL

Id.	Modification	Date	Name
0	Drawn	20.07.2012	Lucas

	Date	Name
Drawn	20.07.2012	Lucas
Approved	20.07.2012	Jackey

ASSMANN WSW components

Customer-No.
CONRAD 183807

ASSMANN WSW-No.
A 24-LC/7-T

Drawing-No.
ASS 4920 CO

rev00

Replace

Sheet