Feb.1.2018 Copyright 2018 HIROSE ELECTRIC CO., LTD. All Rights Reserved.

	COUNT	DESCRIPTION OF REVISIONS	BY	CHKD	DATE		COUNT	DESCRIPTION OF REVISIONS	BY	CHKD	DATE
△					. .	△					. .
△					. .	△					. .
△					. .	△					. .

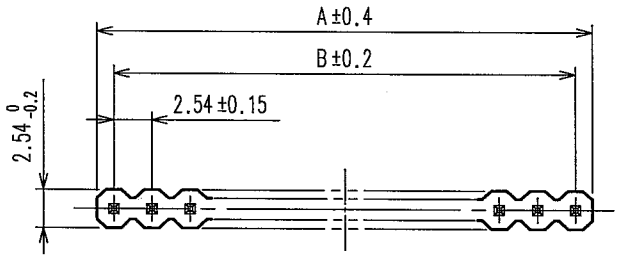

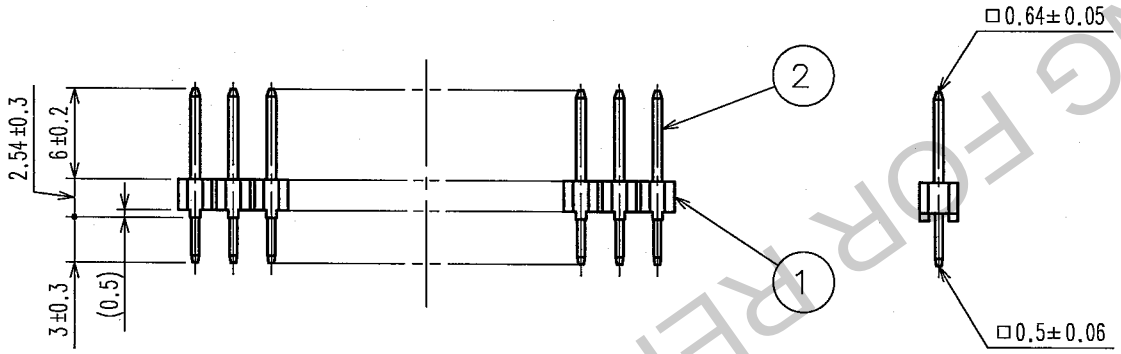

RECOMMENDEND PC BOARD HOLE PATTERN

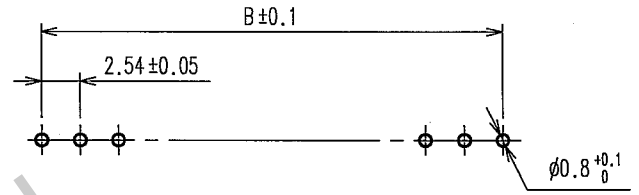

PART NO.	CODE NO.	2	A	B
A2- 1PA-2.54DSA(71)	CL620-0051-5-71	1	2.24	—
A2- 2PA-2.54DSA(71)	CL620-0052-8-71	2	4.78	2.54
A2- 3PA-2.54DSA(71)	CL620-0053-0-71	3	7.32	5.08
A2- 4PA-2.54DSA(71)	CL620-0054-3-71	4	9.86	7.62
A2- 5PA-2.54DSA(71)	CL620-0055-6-71	5	12.40	10.16
A2- 6PA-2.54DSA(71)	CL620-0056-9-71	6	14.94	12.70
A2- 7PA-2.54DSA(71)	CL620-0057-1-71	7	17.48	15.24
A2- 8PA-2.54DSA(71)	CL620-0058-4-71	8	20.02	17.78
A2- 9PA-2.54DSA(71)	CL620-0059-7-71	9	22.56	20.32
A2-10PA-2.54DSA(71)	CL620-0060-6-71	10	25.10	22.86
A2-11PA-2.54DSA(71)	CL620-0061-9-71	11	27.64	25.40
A2-12PA-2.54DSA(71)	CL620-0062-1-71	12	30.18	27.94
A2-13PA-2.54DSA(71)	CL620-0063-4-71	13	32.72	30.48
A2-14PA-2.54DSA(71)	CL620-0064-7-71	14	35.26	33.02
A2-15PA-2.54DSA(71)	CL620-0065-0-71	15	37.80	35.56
A2-16PA-2.54DSA(71)	CL620-0066-2-71	16	40.34	38.10
A2-17PA-2.54DSA(71)	CL620-0067-5-71	17	42.88	40.64
A2-18PA-2.54DSA(71)	CL620-0068-8-71	18	45.42	43.18
A2-19PA-2.54DSA(71)	CL620-0069-0-71	19	47.96	45.72
A2-20PA-2.54DSA(71)	CL620-0070-0-71	20	50.50	48.26

NOTES 1. THE DIMENSIONS IN PARENTHESES ARE FOR REFERENCE.
2 NUMBER OF CONTACTS.

HRS DRAWING FOR REFERENCE

NO.	MATERIAL	FINISH, REMARKS	NO.	MATERIAL	FINISH, REMARKS
1	POLYBUTYLENE TEREPHTALATE	BLACK UL94V-0	2	BRASS	CONTACT AREA : GOLD 0.2μm min. DIP AREA : TIN-PLATING 2μm min. UNDER PLATING : NICKEL 2.5μm min.

CODE NO.(OLD)	DRAWN	DESIGNED	CHECKED	APPROVED	RELEASED
CL	A.SUZUKAWA 05.10.07	K.Doi '05.10.07	K.Ozawa '05.10.07	H.Okawa '05.10.11	. .

SCALE FREE	DRAWING NO. EDC3-018389-21	PART NO. A2-✱✱PA-2.54DSA(71)
UNITS mm	HRS HIROSE ELECTRIC CO., LTD	CODE NO. CL620 1/1

TO
PCK