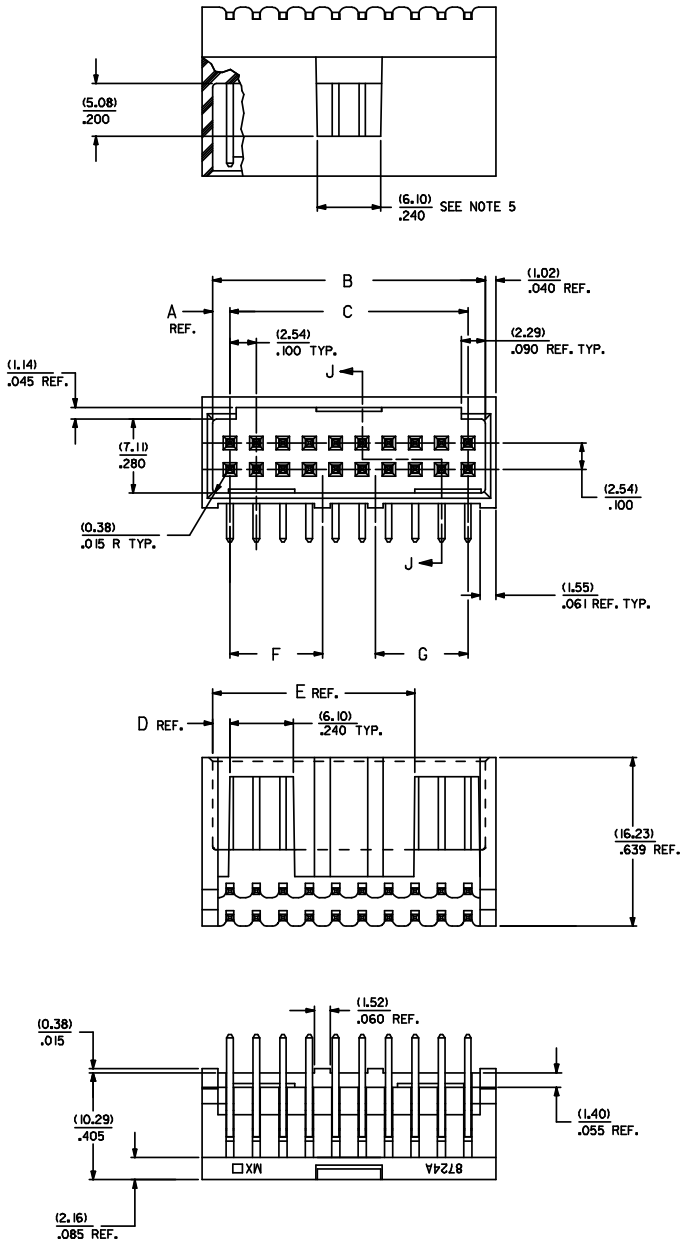

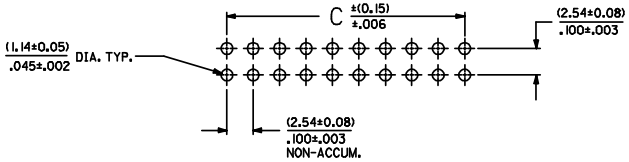

RECOMMENDED P.C. BOARD HOLE LAYOUT

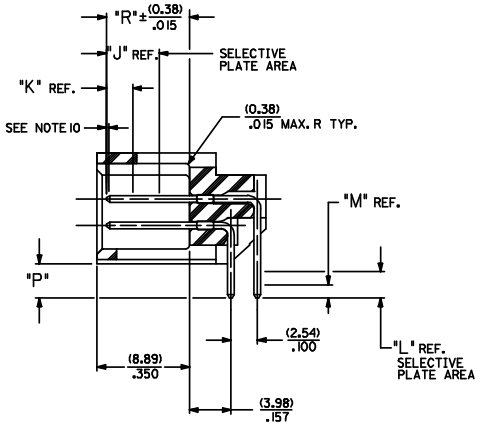

SECTION J-J

CKT.	DIM. "A"	DIM. "B"	DIM. "C"	DIM. "D"	DIM. "E"	DIM. "F"	DIM. "G"	
06	(1.68) .066	(8.43) .332	(5.08) .200	(1.68) .066	—	—	—	—
08	(1.68) .066	(10.97) .432	(7.62) .300	(1.68) .066	—	—	—	—
10	(1.68) .066	(13.51) .532	(10.16) .400	(4.22) .166	—	—	—	—
12	(1.68) .066	(16.05) .632	(12.70) .500	(4.22) .166	—	—	—	—
14	(1.68) .066	(18.59) .732	(15.24) .600	(6.76) .266	—	—	—	—
16	(1.68) .066	(21.13) .832	(17.78) .700	(6.76) .266	—	—	—	—
18	(1.68) .066	(23.67) .932	(20.32) .800	(9.30) .366	—	—	—	—
20	(1.68) .066	(26.21) 1.032	(22.86) .900	(1.68) .066	(19.46) .766	—	—	—
22	(1.68) .066	(28.75) 1.132	(25.40) 1.000	(1.68) .066	(22.00) .866	—	—	—
24	(1.68) .066	(31.29) 1.232	(27.94) 1.100	(1.68) .066	(24.54) .966	(16.64) .655	—	—
26	(1.68) .066	(33.83) 1.332	(30.48) 1.200	(1.68) .066	(27.08) 1.066	(16.64) .655	—	—
28	(1.68) .066	(36.37) 1.432	(33.02) 1.300	(1.68) .066	(29.62) 1.166	(16.64) .655	—	—
30	(1.68) .066	(38.91) 1.532	(35.56) 1.400	(1.68) .066	(32.16) 1.266	(16.64) .655	—	—
32	(1.68) .066	(41.45) 1.632	(38.10) 1.500	(1.68) .066	(34.70) 1.366	(16.64) .655	—	—
34	(1.68) .066	(43.99) 1.732	(40.64) 1.600	(1.68) .066	(37.24) 1.466	(16.64) .655	(16.76) .660	—
36	(1.68) .066	(46.53) 1.832	(43.18) 1.700	(1.68) .066	(39.78) 1.566	(16.64) .655	(16.76) .660	—
38	(1.68) .066	(49.07) 1.932	(45.72) 1.800	(1.68) .066	(42.32) 1.666	(16.64) .655	(16.76) .660	—
40	(1.68) .066	(51.61) 2.032	(48.26) 1.900	(1.68) .066	(44.86) 1.766	(16.64) .655	(16.76) .660	—
42	(1.68) .066	(54.15) 2.132	(50.80) 2.000	(1.68) .066	(47.40) 1.866	(16.64) .655	(16.76) .660	—
44	(1.68) .066	(56.69) 2.232	(53.34) 2.100	(1.68) .066	(49.94) 1.966	(19.05) .750	(16.76) .660	—
46	(1.68) .066	(59.23) 2.332	(55.88) 2.200	(1.68) .066	(52.48) 2.066	(19.05) .750	(16.76) .660	—
48	(1.68) .066	(61.77) 2.432	(58.42) 2.300	(1.68) .066	(55.02) 2.166	(19.05) .750	(16.76) .660	—
50	(1.68) .066	(64.31) 2.532	(60.96) 2.400	(1.68) .066	(57.56) 2.266	(19.05) .750	(16.76) .660	—
52	(1.68) .066	(66.85) 2.632	(63.50) 2.500	(1.68) .066	(60.10) 2.366	(19.05) .750	(16.76) .660	—
54	(1.68) .066	(69.39) 2.732	(66.04) 2.600	(1.68) .066	(62.64) 2.466	(21.59) .850	(21.84) .860	—
56	(1.68) .066	(71.93) 2.832	(68.58) 2.700	(1.68) .066	(65.18) 2.566	(21.59) .850	(21.84) .860	—
58	(1.68) .066	(74.47) 2.932	(71.12) 2.800	(1.68) .066	(67.72) 2.666	(27.81) 1.095	(26.92) 1.060	—
60	(1.68) .066	(77.01) 3.032	(73.66) 2.900	(1.68) .066	(70.26) 2.766	(27.81) 1.095	(26.92) 1.060	—
62	(1.68) .066	(79.55) 3.132	(76.20) 3.000	(1.68) .066	(72.80) 2.866	(27.81) 1.095	(26.92) 1.060	—
64	(1.68) .066	(82.09) 3.232	(78.74) 3.100	(1.68) .066	(75.34) 2.966	(27.81) 1.095	(26.92) 1.060	—
66	(1.68) .066	(84.63) 3.332	(81.28) 3.200	(1.68) .066	(77.88) 3.066	(27.81) 1.095	(26.92) 1.060	—
68	(1.68) .066	(87.17) 3.432	(83.82) 3.300	(1.68) .066	(80.42) 3.166	(27.81) 1.095	(26.92) 1.060	—
70	(1.68) .066	(89.71) 3.532	(86.36) 3.400	(1.68) .066	(82.96) 3.266	(27.81) 1.095	(26.92) 1.060	—
72	(1.68) .066	(92.25) 3.632	(88.90) 3.500	(1.68) .066	(85.50) 3.366	(27.81) 1.095	(26.92) 1.060	—

NOTES:

1. MATERIAL: SHROUDED WAFER: GLASS FILLED NYLON, COLOR: BLACK, UL94V-0
   PINS PHOSPHOR BRONZE
2. FINISH: SEE CHARTS
3. PRODUCT SPECIFICATION: PS-8723
4. PACKAGING INFORMATION: SEE CHARTS
5. WINDOW NOT AVAILABLE ON 6 CKT.
6. FOR CHARTED DIMENSIONS AND ASSEMBLY NO.S NOT SHOWN ON
   THIS SHEET - SEE SHEET 2.
7. 20 CIRCUIT SIZE SHOWN FOR ILLUSTRATION PURPOSES.
8. PIN PUSHOUT FORCE: (17.79 N)/4 LBS.
9. PINS MUST MEET SOLDERABLILITY SPEC. MIL-STD-202 METHOD 208B.
10. ROW TO ROW PIN HEIGHT VARIATION MUST NOT EXCEED (0.25)/.010 IN.
11. THIS PART CONFORMS TO CLASS B REQUIREMENTS OF COSMETIC
    SPECIFICATION PS-45499-002.

ASSEMBLY STYLES "A", "B", AND "G"

SH.	REV.
8	R1
7	R1
6	R1
5	R1
4	R1
3	R1
2	R1
1	R1

ADD NOTES
EC NO: UCP2008-1539 2008/01/28
DRWN:ADERR 2008/01/31
CHKD:JBELL 2008/02/08
APPR:FSMITH
DESCRIPTION
R1
REV

QUALITY SYMBOLS
▼=0
▽=0

GENERAL TOLERANCES (UNLESS SPECIFIED)

	mm	INCH
4 PLACES	± ---	± ---
3 PLACES	± ---	± .010
2 PLACES	± 0.25	± .014
1 PLACE	± 0.36	± ---
ANGULAR ±1/2°		

DRAFT WHERE APPLICABLE MUST REMAIN WITHIN DIMENSIONS

DIMENSION STYLE: MM/IN
SCALE: 4:1
DESIGN UNITS: INCH
THIRD ANGLE PROJECTION

		DATE
DRAWN BY	JL	1986/06/26
CHECKED BY	RB	1986/06/26
APPROVED BY	WAZ	1986/06/26

TITLE
SALES ASSEMBLY
WAFER-RIGHT ANGLE FULLY
SHROUDED .100 GRID

molex MOLEX INCORPORATED

MATERIAL NO.: SEE CHART
DOCUMENT NO.: SDA-8724-******
SHEET NO.: 1 OF 8
SIZE: D

THIS DRAWING CONTAINS INFORMATION THAT IS PROPRIETARY TO MOLEX INCORPORATED AND SHOULD NOT BE USED WITHOUT WRITTEN PERMISSION

tb_frame_D_P_ME_T
Rev. E 2006/04/15

ENGINEERING PART NUMBER A-8724-	RELEASE FOR MANUFACTURE	P REF.	PLATING (SEE NOTES ON THIS SHEET)	CONNECTOR END PLATING TYPE	J LENGTH	K MEAS.	R ± (0.38) .015	P.C. BOARD END PLATING TYPE	L LENGTH	M MEAS.	PACKAGING INFORMATION PK-70873-
06A164 / 72A164	RFM	(3.30) .130	TIN	TIN	———	(2.54) .100	(8.00) .315	TIN	———	(1.27) .050	0019
06B164 / 72B164	RFM	(5.08) .200	TIN	TIN	———	(2.54) .100	(8.00) .315	TIN	———	(1.27) .050	0019
06A571 / 72A571	RFM	(3.30) .130	15 GOLD	GOLD	(5.08) .200	(2.54) .100	(8.00) .315	TIN	(2.54) .100	(1.27) .050	0019
06B571 / 72B571	RFM	(5.08) .200	15 GOLD	GOLD	(5.08) .200	(2.54) .100	(8.00) .315	TIN	(2.54) .100	(1.27) .050	0019
06A574 / 72A574	RFM	(3.30) .130	30 GOLD	GOLD	(5.08) .200	(2.54) .100	(8.00) .315	TIN	(2.54) .100	(1.27) .050	0019
06B574 / 72B574	RFM	(5.08) .200	30 GOLD	GOLD	(5.08) .200	(2.54) .100	(8.00) .315	TIN	(2.54) .100	(1.27) .050	0019
06G164 / 72G164	RFM	(3.30) .130	TIN	TIN	———	(2.54) .100	(6.35) .250	TIN	———	(1.27) .050	0019

PLATING FINISHES:

TIN — TIN (Sn) OVER ENTIRE PIN;
THICKNESS=(3.75 MICROMETER)/75 MICROINCH MINIMUM;
NICKEL (Ni) UNDERPLATE OVER ENTIRE PIN.

15 GOLD — SELECTIVE GOLD (Au) IN THE CONTACT AREA;
THICKNESS=(0.37 MICROMETER)/15 MICROINCH MINIMUM;
SELECTIVE TIN (Sn) IN THE PC TAIL AREA;
THICKNESS=(1.88 MICROMETER)/75 MICROINCH MINIMUM;
NICKEL (Ni) UNDERPLATE OVER ENTIRE PIN.

30 GOLD — SELECTIVE GOLD (Au) IN THE CONTACT AREA;
THICKNESS=(0.75 MICROMETER)/30 MICROINCH MINIMUM;
SELECTIVE TIN (Sn) IN THE PC TAIL AREA;
THICKNESS=(1.88 MICROMETER)/75 MICROINCH MINIMUM;
NICKEL (Ni) UNDERPLATE OVER ENTIRE PIN.

*THE PRIMARY SHIPPING CARTON WILL BE LABELED "COMPLIANT TO RoHS DIRECTIVE 2002/95/EC AND ELV ANNEX II OF DIRECTIVE 2000/53/EC". CARTONS WITHOUT THIS LABEL MAY CONTAIN PRODUCT WITH LEAD.

NO. OF CKTS	TIN		TIN		15 GOLD		15 GOLD		30 GOLD		30 GOLD		TIN							
	EDP NUMBER	ENG NUMBER	EDP NUMBER	ENG NUMBER	EDP NUMBER	ENG NUMBER	EDP NUMBER	ENG NUMBER	EDP NUMBER	ENG NUMBER	EDP NUMBER	ENG NUMBER	EDP NUMBER	ENG NUMBER	EDP NUMBER	ENG NUMBER	EDP NUMBER	ENG NUMBER	EDP NUMBER	ENG NUMBER
06	15-42-7006	A-8724-06A164	15-42-7106	A-8724-06B164	15-29-7006	A-8724-06A571	15-29-7106	A-8724-06B571	15-41-8006	A-8724-06A574	15-41-8106	A-8724-06B574	15-41-9106	A-8724-06G164						
08	15-42-7008	A-8724-08A164	15-42-7108	A-8724-08B164	15-29-7008	A-8724-08A571	15-29-7108	A-8724-08B571	15-41-8008	A-8724-08A574	15-41-8108	A-8724-08B574	15-41-9108	A-8724-08G164						
10	15-42-7010	A-8724-10A164	15-42-7110	A-8724-10B164	15-29-7010	A-8724-10A571	15-29-7110	A-8724-10B571	15-41-8010	A-8724-10A574	15-41-8110	A-8724-10B574	15-41-9110	A-8724-10G164						
12	15-42-7012	A-8724-12A164	15-42-7112	A-8724-12B164	15-29-7012	A-8724-12A571	15-29-7112	A-8724-12B571	15-41-8012	A-8724-12A574	15-41-8112	A-8724-12B574	15-41-9112	A-8724-12G164						
14	15-42-7014	A-8724-14A164	15-42-7114	A-8724-14B164	15-29-7014	A-8724-14A571	15-29-7114	A-8724-14B571	15-41-8014	A-8724-14A574	15-41-8114	A-8724-14B574	15-41-9114	A-8724-14G164						
16	15-42-7016	A-8724-16A164	15-42-7116	A-8724-16B164	15-29-7016	A-8724-16A571	15-29-7116	A-8724-16B571	15-41-8016	A-8724-16A574	15-41-8116	A-8724-16B574	15-41-9116	A-8724-16G164						
18	15-42-7018	A-8724-18A164	15-42-7118	A-8724-18B164	15-29-7018	A-8724-18A571	15-29-7118	A-8724-18B571	15-41-8018	A-8724-18A574	15-41-8118	A-8724-18B574	15-41-9118	A-8724-18G164						
20	15-42-7020	A-8724-20A164	15-42-7120	A-8724-20B164	15-29-7020	A-8724-20A571	15-29-7120	A-8724-20B571	15-41-8020	A-8724-20A574	15-41-8120	A-8724-20B574	15-41-9120	A-8724-20G164						
22	15-42-7022	A-8724-22A164	15-42-7122	A-8724-22B164	15-29-7022	A-8724-22A571	15-29-7122	A-8724-22B571	15-41-8022	A-8724-22A574	15-41-8122	A-8724-22B574	15-41-9122	A-8724-22G164						
24	15-42-7024	A-8724-24A164	15-42-7124	A-8724-24B164	15-29-7024	A-8724-24A571	15-29-7124	A-8724-24B571	15-41-8024	A-8724-24A574	15-41-8124	A-8724-24B574	15-41-9124	A-8724-24G164						
26	15-42-7026	A-8724-26A164	15-42-7126	A-8724-26B164	15-29-7026	A-8724-26A571	15-29-7126	A-8724-26B571	15-41-8026	A-8724-26A574	15-41-8126	A-8724-26B574	15-41-9126	A-8724-26G164						
28	15-42-7028	A-8724-28A164	15-42-7128	A-8724-28B164	15-29-7028	A-8724-28A571	15-29-7128	A-8724-28B571	15-41-8028	A-8724-28A574	15-41-8128	A-8724-28B574	15-41-9128	A-8724-28G164						
30	15-42-7030	A-8724-30A164	15-42-7130	A-8724-30B164	15-29-7030	A-8724-30A571	15-29-7130	A-8724-30B571	15-41-8030	A-8724-30A574	15-41-8130	A-8724-30B574	15-41-9130	A-8724-30G164						
32	15-42-7032	A-8724-32A164	15-42-7132	A-8724-32B164	15-29-7032	A-8724-32A571	15-29-7132	A-8724-32B571	15-41-8032	A-8724-32A574	15-41-8132	A-8724-32B574	15-41-9132	A-8724-32G164						
34	15-42-7034	A-8724-34A164	15-42-7134	A-8724-34B164	15-29-7034	A-8724-34A571	15-29-7134	A-8724-34B571	15-41-8034	A-8724-34A574	15-41-8134	A-8724-34B574	15-41-9134	A-8724-34G164						
36	15-42-7036	A-8724-36A164	15-42-7136	A-8724-36B164	15-29-7036	A-8724-36A571	15-29-7136	A-8724-36B571	15-41-8036	A-8724-36A574	15-41-8136	A-8724-36B574	15-41-9136	A-8724-36G164						
38	15-42-7038	A-8724-38A164	15-42-7138	A-8724-38B164	15-29-7038	A-8724-38A571	15-29-7138	A-8724-38B571	15-41-8038	A-8724-38A574	15-41-8138	A-8724-38B574	15-41-9138	A-8724-38G164						
40	15-42-7040	A-8724-40A164	15-42-7140	A-8724-40B164	15-29-7040	A-8724-40A571	15-29-7140	A-8724-40B571	15-41-8040	A-8724-40A574	15-41-8140	A-8724-40B574	15-41-9140	A-8724-40G164						
42	15-42-7042	A-8724-42A164	15-42-7142	A-8724-42B164	15-29-7042	A-8724-42A571	15-29-7142	A-8724-42B571	15-41-8042	A-8724-42A574	15-41-8142	A-8724-42B574	15-41-9142	A-8724-42G164						
44	15-42-7044	A-8724-44A164	15-42-7144	A-8724-44B164	15-29-7044	A-8724-44A571	15-29-7144	A-8724-44B571	15-41-8044	A-8724-44A574	15-41-8144	A-8724-44B574	15-41-9144	A-8724-44G164						
46	15-42-7046	A-8724-46A164	15-42-7146	A-8724-46B164	15-29-7046	A-8724-46A571	15-29-7146	A-8724-46B571	15-41-8046	A-8724-46A574	15-41-8146	A-8724-46B574	15-41-9146	A-8724-46G164						
48	15-42-7048	A-8724-48A164	15-42-7148	A-8724-48B164	15-29-7048	A-8724-48A571	15-29-7148	A-8724-48B571	15-41-8048	A-8724-48A574	15-41-8148	A-8724-48B574	15-41-9148	A-8724-48G164						
50	15-42-7050	A-8724-50A164	15-42-7150	A-8724-50B164	15-29-7050	A-8724-50A571	15-29-7150	A-8724-50B571	15-41-8050	A-8724-50A574	15-41-8150	A-8724-50B574	15-41-9150	A-8724-50G164						
52	15-42-7052	A-8724-52A164	15-42-7152	A-8724-52B164	15-29-7052	A-8724-52A571	15-29-7152	A-8724-52B571	15-41-8052	A-8724-52A574	15-41-8152	A-8724-52B574	15-41-9152	A-8724-52G164						
54	15-42-7054	A-8724-54A164	15-42-7154	A-8724-54B164	15-29-7054	A-8724-54A571	15-29-7154	A-8724-54B571	15-41-8054	A-8724-54A574	15-41-8154	A-8724-54B574	15-41-9154	A-8724-54G164						
56	15-42-7056	A-8724-56A164	15-42-7156	A-8724-56B164	15-29-7056	A-8724-56A571	15-29-7156	A-8724-56B571	15-41-8056	A-8724-56A574	15-41-8156	A-8724-56B574	15-41-9156	A-8724-56G164						
58	15-42-7058	A-8724-58A164	15-42-7158	A-8724-58B164	15-29-7058	A-8724-58A571	15-29-7158	A-8724-58B571	15-41-8058	A-8724-58A574	15-41-8158	A-8724-58B574	15-41-9158	A-8724-58G164						
60	15-42-7060	A-8724-60A164	15-42-7160	A-8724-60B164	15-29-7060	A-8724-60A571	15-29-7160	A-8724-60B571	15-41-8060	A-8724-60A574	15-41-8160	A-8724-60B574	15-41-9160	A-8724-60G164						
62	15-42-7062	A-8724-62A164	15-42-7162	A-8724-62B164	15-29-7062	A-8724-62A571	15-29-7162	A-8724-62B571	15-41-8062	A-8724-62A574	15-41-8162	A-8724-62B574	15-41-9162	A-8724-62G164						
64	15-42-7064	A-8724-64A164	15-42-7164	A-8724-64B164	15-29-7064	A-8724-64A571	15-29-7164	A-8724-64B571	15-41-8064	A-8724-64A574	15-41-8164	A-8724-64B574	15-41-9164	A-8724-64G164						
66	15-42-7066	A-8724-66A164	15-42-7166	A-8724-66B164	15-29-7066	A-8724-66A571	15-29-7166	A-8724-66B571	15-41-8066	A-8724-66A574	15-41-8166	A-8724-66B574	15-41-9166	A-8724-66G164						
68	15-42-7068	A-8724-68A164	15-42-7168	A-8724-68B164	15-29-7068	A-8724-68A571	15-29-7168	A-8724-68B571	15-41-8068	A-8724-68A574	15-41-8168	A-8724-68B574	15-41-9168	A-8724-68G164						
70	15-42-7070	A-8724-70A164	15-42-7170	A-8724-70B164	15-29-7070	A-8724-70A571	15-29-7170	A-8724-70B571	15-41-8070	A-8724-70A574	15-41-8170	A-8724-70B574	15-41-9170	A-8724-70G164						
72	15-42-7072	A-8724-72A164	15-42-7172	A-8724-72B164	15-29-7072	A-8724-72A571	15-29-7172	A-8724-72B571	15-41-8072	A-8724-72A574	15-41-8172	A-8724-72B574	15-41-9172	A-8724-72G164						

UPDATE TITLE BLOCK
EC NO: UCP2008-1539 2008/01/28
DRWN:ADERR 2008/01/31
CHKD:JBELL
APPR:FSMITH 2008/02/08
DESCRIPTION
REV R1

QUALITY SYMBOLS
▼=0
▽=0

GENERAL TOLERANCES (UNLESS SPECIFIED)

	mm	INCH
4 PLACES	± ---	± ---
3 PLACES	± ---	± ---
2 PLACES	± ---	± ---
1 PLACE	± ---	± ---
ANGULAR ±1/2°		

DRAFT WHERE APPLICABLE MUST REMAIN WITHIN DIMENSIONS

DIMENSION STYLE: MM/IN
SCALE: ---
DESIGN UNITS: INCH
THIRD ANGLE PROJECTION

DRAWN BY	JL	DATE 1986/06/26
CHECKED BY	RB	DATE 1986/06/26
APPROVED BY	WAZ	DATE 1986/06/26

TITLE
SALES ASSEMBLY
WAFER-RIGHT ANGLE FULLY SHROUDED .100 GRID

molex MOLEX INCORPORATED

MATERIAL NO. SEE CHART
DOCUMENT NO. SDA-8724-******
SHEET NO. 2 OF 8
SIZE D

THIS DRAWING CONTAINS INFORMATION THAT IS PROPRIETARY TO MOLEX INCORPORATED AND SHOULD NOT BE USED WITHOUT WRITTEN PERMISSION