DRAWING MADE IN THIRD ANGLE PROJECTION

© COPYRIGHT 1975-83 BY AMP INCORPORATED, HARRISBURG, PA. ALL INTERNATIONAL RIGHTS RESERVED. AMP INCORPORATED PRODUCTS COVERED BY U. S. AND FOREIGN PATENTS AND/OR PATENTS PENDING.

LOC AD | DIST 39

REVISIONS

P/F	ZONE	LTR	DESCRIPTION	DATE	APPROVED
		G	REV PER 0310-0025-98	04OCT01	JO
		G1	REVISED PER ECO-09-026346	NOV09	AEG

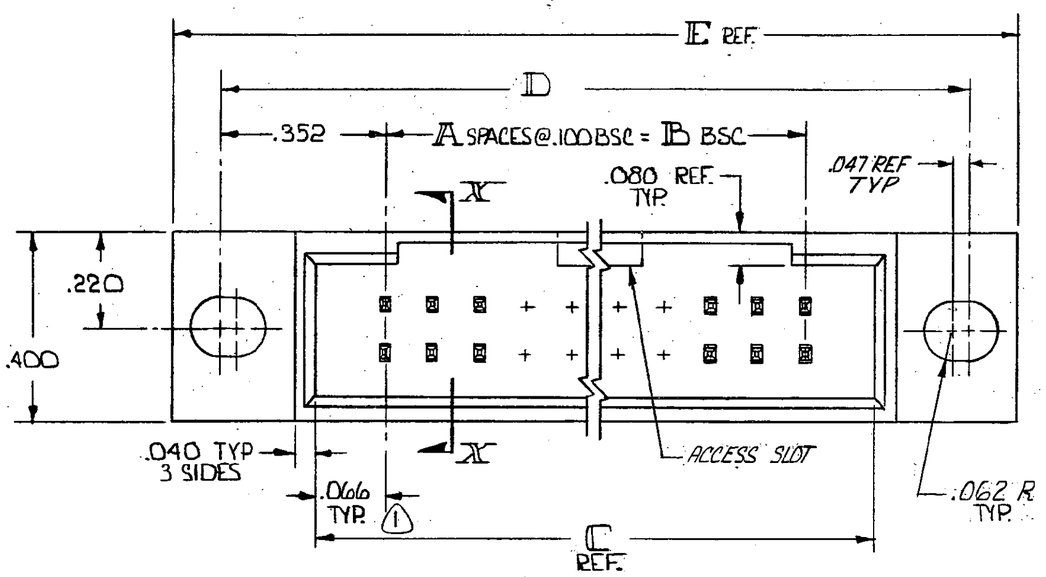

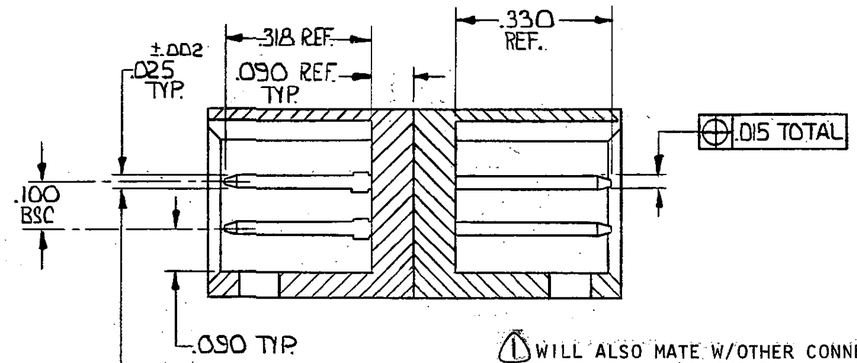

SECTION X-X

1 WILL ALSO MATE W/OTHER CONNECTORS WHICH ARE COMPATIBLE WITH THE .066 END DIM.

2 OBSOLETE PART NUMBER

3 OBSOLETE PARTS: OBSOLETE CIS STREAMLINING PER D.RENAUD/D.SINISI

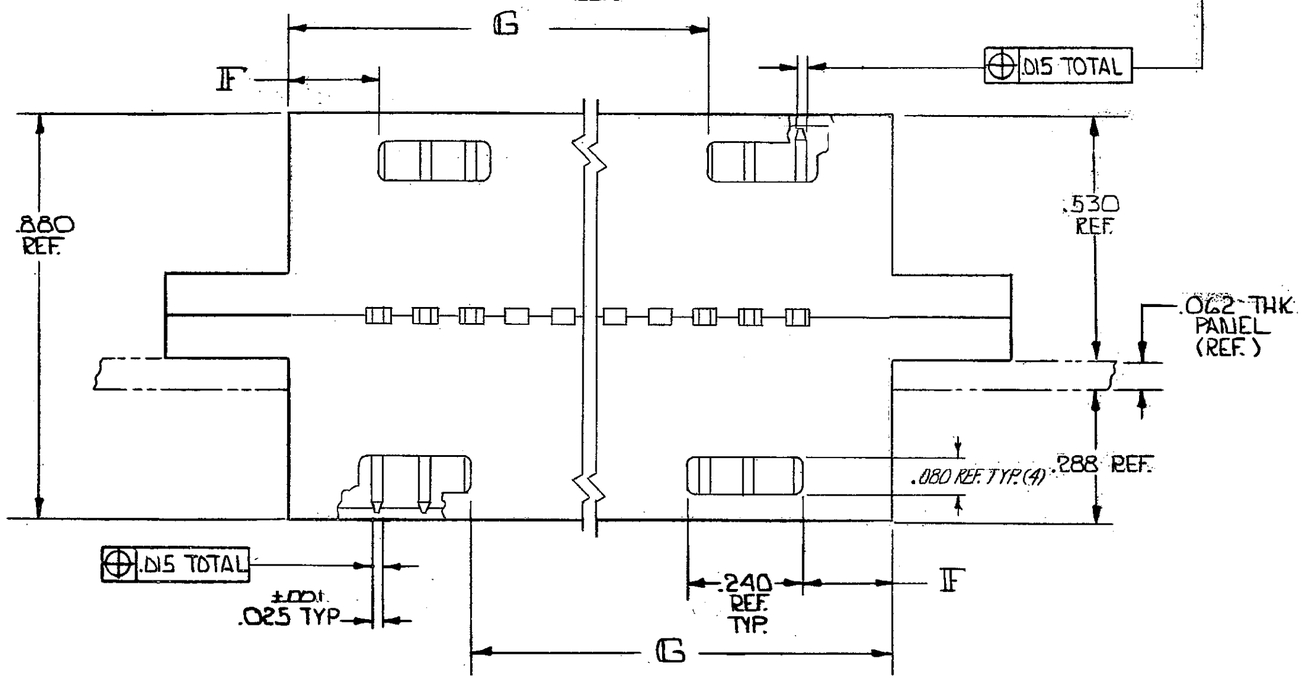

	H	G	F	E	D	C	B	A	NO. OF POS.	PART NO
OBSOLETE 3	3.132	2.806	.106	3.804	3.604	3.032	2.900	29	60	~~2-87608-6~~
	3.032	2.706		3.704	3.504	2.932	2.800	28	58	2- 2 -5
	2.932	2.606		3.604	3.404	2.832	2.700	27	56	2- 2 -4
	2.832	2.506		3.504	3.304	2.732	2.600	26	54	2- 2 -3
	2.732	2.406		3.404	3.204	2.632	2.500	25	52	2- 2 -2
	2.632	2.306		3.304	3.104	2.532	2.400	24	50	2- -1
	2.532	2.206		3.204	3.004	2.432	2.300	23	48	1- 2 -0
	2.432	2.106		3.104	2.904	2.332	2.200	22	46	1- 2 -9
	2.332	2.006		3.004	2.804	2.232	2.100	21	44	1- 2 -8
	2.232	1.906		2.904	2.704	2.132	2.000	20	42	1- 2 -7
	2.132	1.806		2.804	2.604	2.032	1.900	19	40	1- -6
	2.032	1.706		2.704	2.504	1.932	1.800	18	38	1- 2 -5
	1.932	1.606		2.604	2.404	1.832	1.700	17	36	1- 2 -4
	1.832	1.506		2.504	2.304	1.732	1.600	16	34	1- -3
	1.732	1.406		2.404	2.204	1.632	1.500	15	32	1- 2 -2
	1.632	1.306		2.304	2.104	1.532	1.400	14	30	1- 2 -1
	1.532	1.206		2.204	2.004	1.432	1.300	13	28	1- 2 -0
OBSOLETE 3	1.432	1.106		2.104	1.904	1.332	1.200	12	26	~~-9~~
	1.332	1.006		2.004	1.804	1.232	1.100	11	24	~~-8~~
	1.232	.906		1.904	1.704	1.132	1.000	10	22	2 -7
	1.132	.806	.106	1.804	1.604	1.032	.900	9	20	-6
	1.032	—	.406	1.704	1.504	.932	.800	8	18	-5
	.932	—	.306	1.604	1.404	.832	.700	7	16	2 -4
	.832	—	.306	1.504	1.304	.732	.600	6	14	2 -3
	.732	—	.206	1.404	1.204	.632	.500	5	12	-2
	.632	—	.206	1.304	1.104	.532	.400	4	10	87608 -1

87608

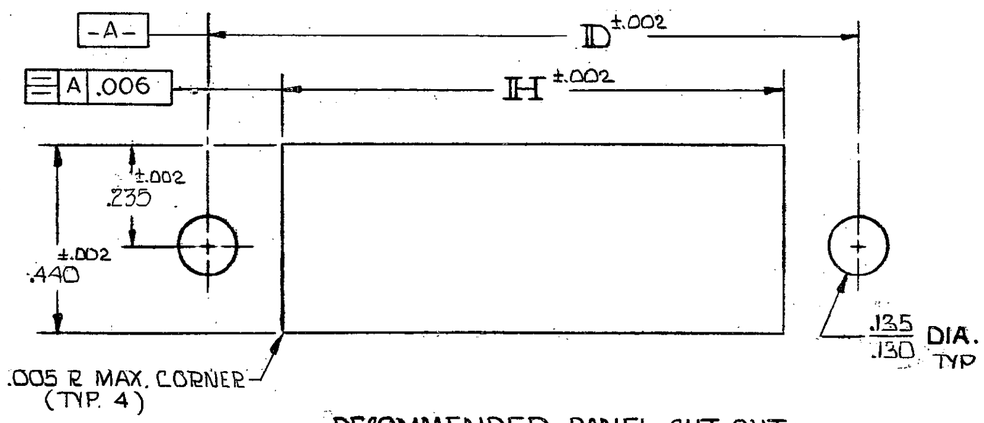

RECOMMENDED PANEL CUT-OUT

UNLESS OTHERWISE SPECIFIED DIMENSIONS ARE IN INCHES.
TOLERANCES ON:
DECIMALS ±.005
ANGLES ±

MATERIAL
HSG'S. - GLASS FILLED NYLON
COLOR: BLACK
CONTACT - PHOS BRONZE

FINISH
CONTACT - .000030 GOLD OVER .000050 NICKEL

CONTRACT NO

DR 9/18/75
CHK 9-18-75
APPD 9/22/75
APPD 9/22/75
DSGN APPD
OTHER APPD

AMP INCORPORATED Harrisburg, Pa.

NAME
HEADER ASS'Y., MOD II, .100 x .100 CENTERS, MTG. EARS, W/ PIN PROTECTORS BOTH SIDES
MATES W/ MOD IV (BOTH SIDES) 1

SIZE	CODE IDENT NO	DRAWING NO
C	00779	87608

SCALE — | SHEET 1 of 1

AMP 1871-6 (7-79)

CUSTOMER DRAWING