THIS DRAWING IS UNPUBLISHED. RELEASED FOR PUBLICATION -,- .
© COPYRIGHT - By - ALL RIGHTS RESERVED.

REVISIONS

P	LTR	DESCRIPTION	DATE	DWN	APVD
	V	REV PER ECO 17-000132	5-1-17	CT	DM

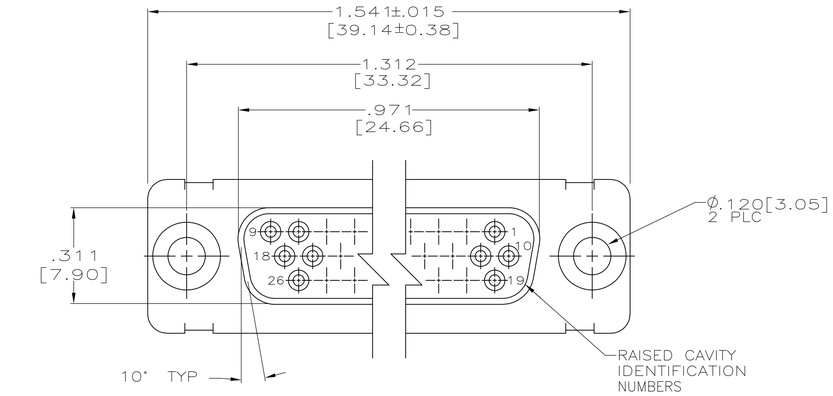

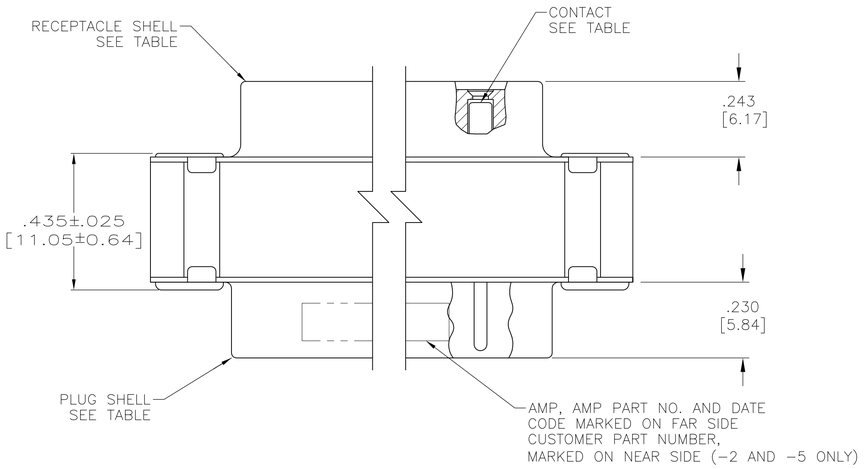

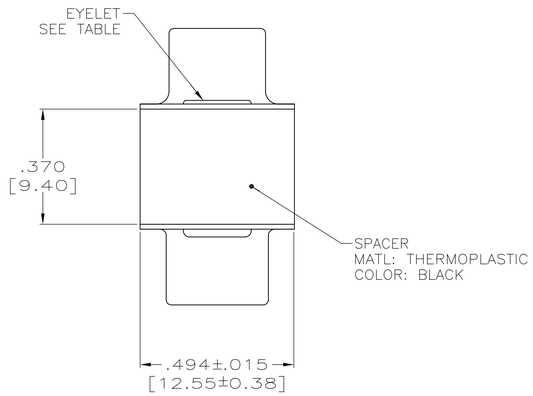

1. CONTACTS INCLUDED IN ASSEMBLY.
2. MAT'L: STEEL, PER ASTM-A-109.
3. FINISH: CADIUM PER QQ-P-416.
4. MAT'L: BRASS PER ASTM-B-36.
5. FINISH: PLATED ZINC .00020 MIN THK PER ASTM-B-633. YELLOW CHROMATE FINISH.
6. CONTACT
   BODY MAT'L: BERYLLIUM COPPER PER ASTM-B-197.
   BODY FINISH: PLATED GOLD, .000050 MIN THK PER MIL-G-45204 OVER NICKEL, .000050 MIN THK PER QQ-N-290.
   HOOD MAT'L: STAINLESS STEEL PER ASTM-A-240.
   HOOD FINISH: PASSIVATED PER QQ-P-35
7. FINISH: PLATED GOLD, .000050 MIN THK PER MIL-G-45204 OVER COPPER FLASH
8. FINISH: PLATED GOLD, .000050 MIN THK PER MIL-G-45204 OVER COPPER, .000100 MIN THK PER MIL-C-14550.
9. CONTACT
   BODY MAT'L: BERYLLIUM COPPER PER ASTM-B-197.
   BODY FINISH: PLATED GOLD, .000050 MIN THK PER MIL-G-45204 OVER COPPER, .000100 MIN THK PER MIL-C-14550.
   HOOD MAT'L: COPPER ALLOY PER QQ-B-613.
   FINISH: PLATED GOLD, .000050 MIN THK PER MIL-G-45204 OVER COPPER, .000100 MIN THK PER MIL-C-14550.

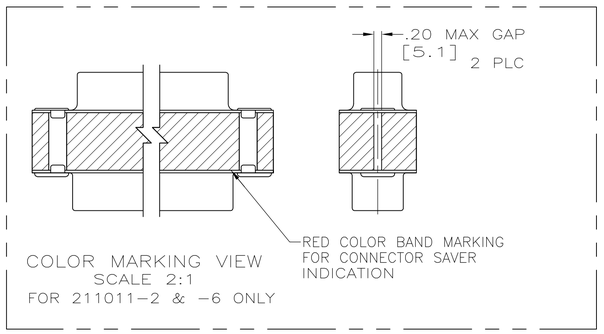

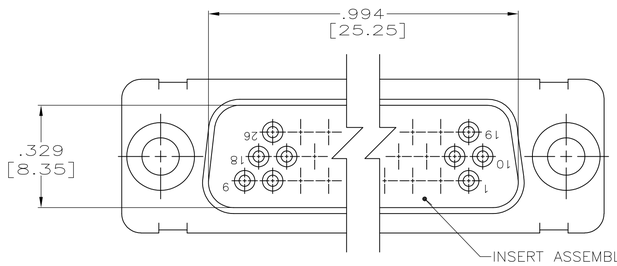

INSERT ASSEMBLY
MATL: POLYPHENEYLENE SULFIDE (PPS) GST-40F PER MIL-M-24519 OR GLASS FILLED POLYESTER, TPES013G30 PER ASTM D5927
COLOR, BLACK

	EYELET	SHELLS	CONTACT	CUSTOMER P/N	PART NO.
	4 8	4 7	6	4U884 SOCN R10002677-0107	211011-6
	4 8	4 7	6	2A091-002W-001	211011-5
	4 8	4 7	9	-	211011-4
OBSOLETE	4 8	4 7	9	-	211011-3
	4 8	4 7	6	(1J02-107)	211011-2
	4 5	2 3	6	-	211011-1

THIS DRAWING IS A CONTROLLED DOCUMENT.

DIMENSIONS: INCHES

TOLERANCES UNLESS OTHERWISE SPECIFIED:
0 PLC ± -
1 PLC ± -
2 PLC ± -
3 PLC ± .005 [0.13]
4 PLC ± -
ANGLES ± -

MATERIAL -
FINISH -

DWN C.C.THOMAS 11-3-98
CHK J.NORTON 11-17-98
APVD J.NORTON 11-17-98
PRODUCT SPEC -
APPLICATION SPEC -
WEIGHT 0.000000

TE Connectivity

NAME CONNECTOR SAVER,AMPLIMITE 26 POSN.,SIZE 2,SERIES 90 -

SIZE	CAGE CODE	DRAWING NO	RESTRICTED TO
A1	00779	C-211011	-

CUSTOMER DRAWING SCALE 4:1 SHEET 1 OF 1 REV V