THIS DRAWING IS UNPUBLIDHED. RELEASED FOR PUBLICATION ,1997 .
© COPYRIGHT 1997 BY AMP INCORPORATED. ALL RIGHTS RESERVED.

LOC	DIST
DS	

REVISIONS

P	LTR	DESCRIPTION	DATE	DWN	APVD
	A	REVISED(FC00-0289-04)	16,NOV,'04	YH	CS
	B	REVISED (ECR-05-002931)	11,MAY,'05	YH	CS
	B1	REVISED (ECR-08-020978)	21,Aug,'08	DR	HG

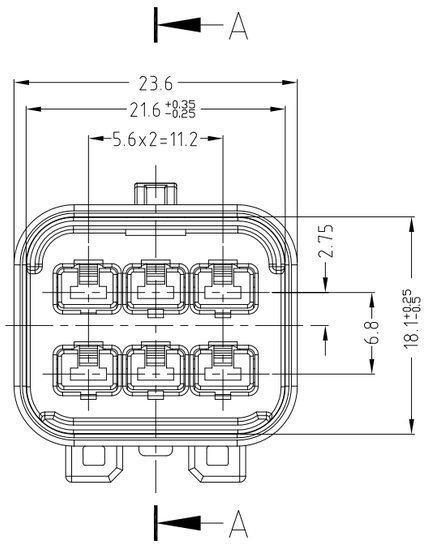

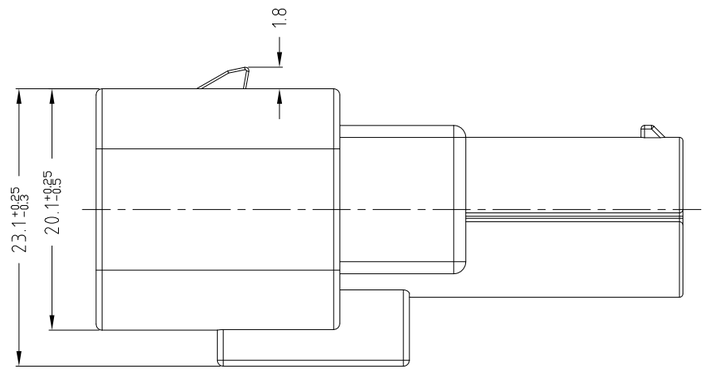

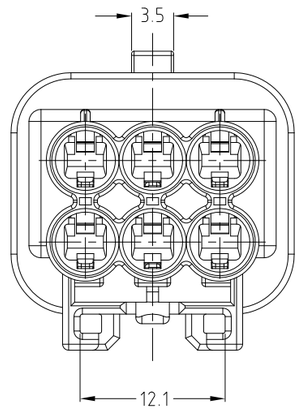

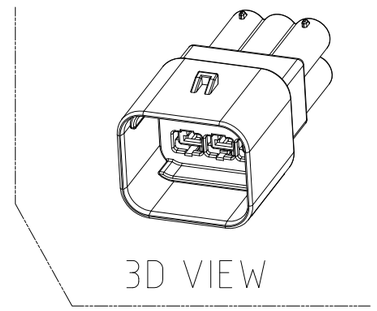

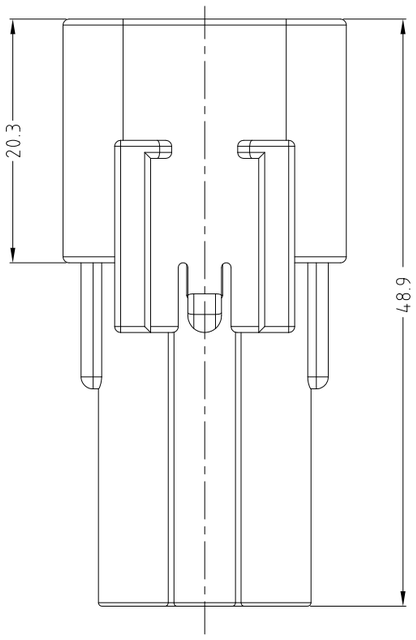

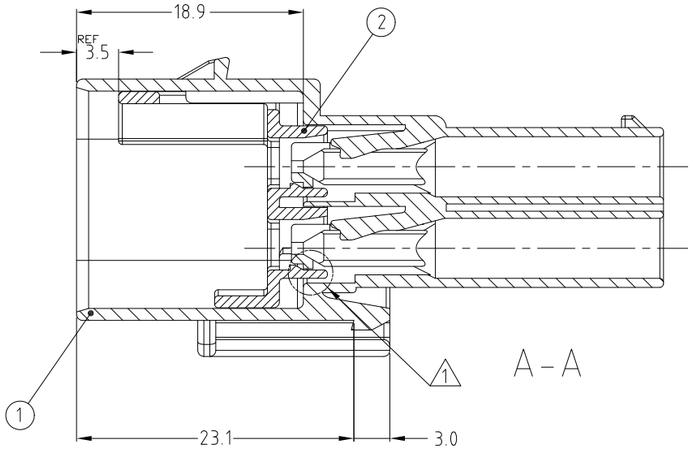

NOTE.
1. CONDITION OF DELIVERY : DBL PLATE IN OPEN POSITION.
2. APPLIED TAB CONTACT P/N:

CONTACT	MCP-E TERMINAL	
Part NO.	936612-1	936613-1
WIRE SIZE(mm²)	1.0~ 2.5SQ	0.5~ 1.0SQ

3. APPLIED FEMALE CONNECTOR P/N : 936257-2
4. APPLIED COVER HSG P/N : 936759-2

NO	FINISH/COLOR	MATERIAL	DESCRIPTION	Q'TY		DESCRIPTION
2	WHITE	PBT GF10	CAP DBL HOUSING FOR MCP-E 6P	1	1	CAP ASS'Y
1	GRAY	PBT	MCP-E SEALED 6P CAP HOUSING	1	•	CAP ASS'Y
	BLACK	PBT	MCP-E SEALED 6P CAP HOUSING	•	1	ASS'Y P/N
					0-936294-2	0-936294-3

THIS DRAWING IS CONTROLLED DOCUMENT FOR AMP INCORPORATED. IT IS SUBJECT TO CHANGE AND THE CONTROLLING ENGINEERING ORGANIZATION SHOULD BE CONTACTED FOR THE LATEST REVISION.

DIMENSIONS: MM

3rd ANGLE PROJECTION

TOLERANCES UNLESS OTHERWISE SPECIFIED:
0 <XX<10 ± 0.2
10<XX<30 ± 0.25
30<XX ± 0.3
ANGLES ± 3°

MATERIAL: SEE TABLE
FINISH: SEE TABLE

DWN DR GOO
CHK YM CHOI
APVD HG CHO
PRODUCT SPEC ---
APPLICATION SPEC ---
WEIGHT ---

CUSTOMER DRAWING

Tyco Electronics
Tyco Electronics
Kyungsan, Korea

NAME: MCP-E SEALED 6P CAP ASS'Y

SIZE	CAGE CODE	DRAWNING NO
A3	00779	C- 936294

SCALE 2 : 1 | SHEET 1 OF 1 | REV B1

AMP 1470-19 REV 09MAY94