THIS DRAWING IS UNPUBLISHED. RELEASED FOR PUBLICATION - , - .
© COPYRIGHT - By - ALL RIGHTS RESERVED.

LOC	DIST
GP	00

REVISIONS

P	LTR	DESCRIPTION	DATE	DWN	APVD
	B	REVISED PER ECO-11-012231	08SEP2011	CJV	CWR

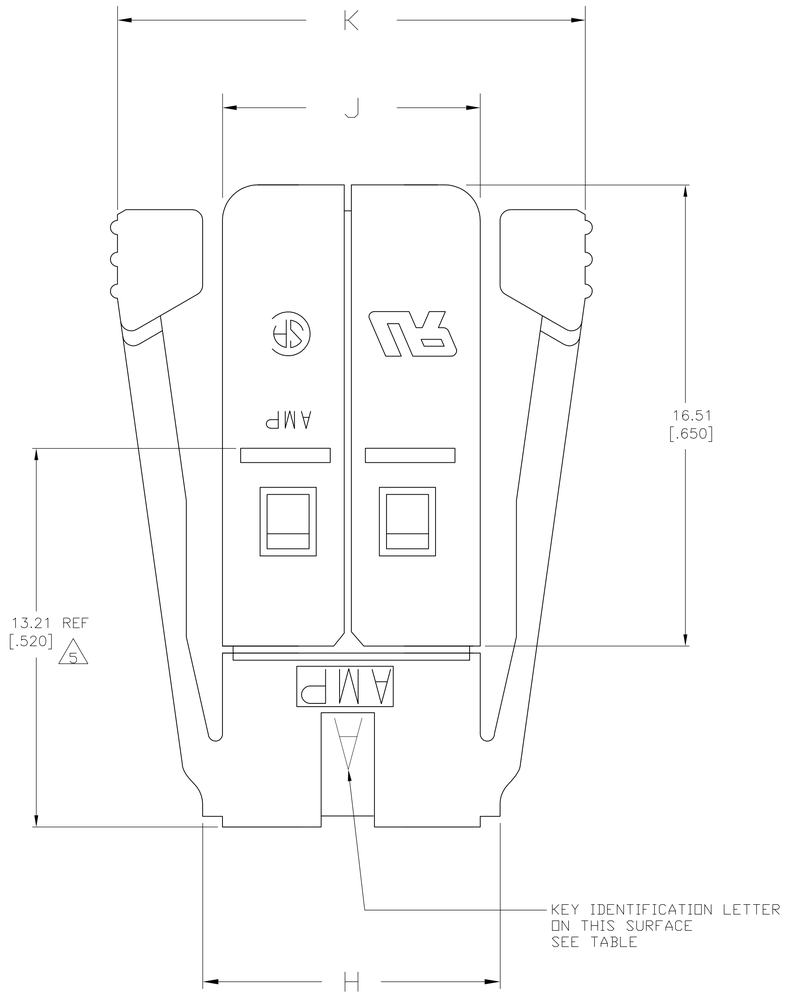

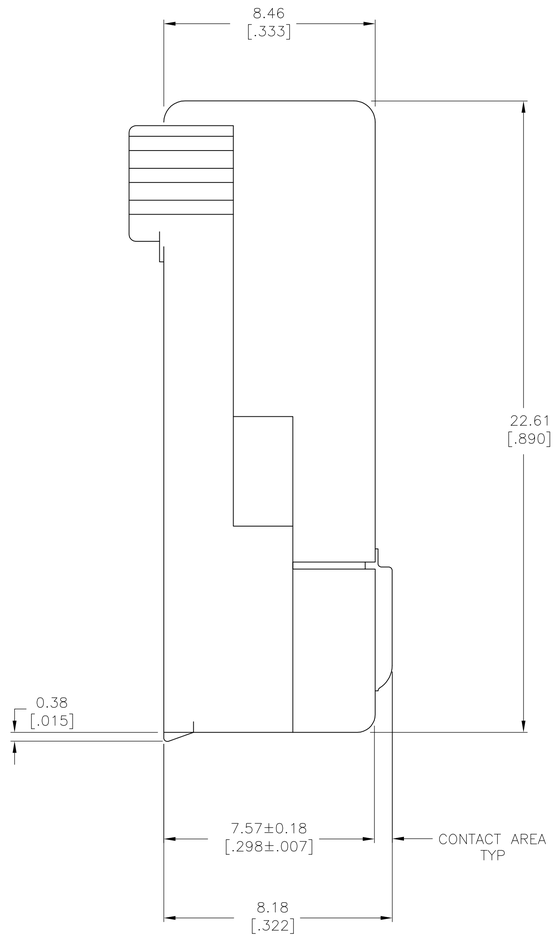

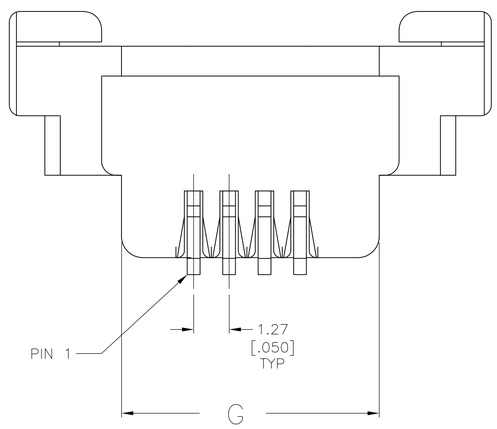

1. PREFIX AND SUFFIX NUMBERS MUST MATCH THOSE ON RECEPTACLE FOR PARTS TO MATE.

2. MATERIAL:
   HOUSING- POLYCARBONATE
   CONTACT- COPPER ALLOY
   SHIELD- BRASS

3. FINISH:
   HOUSING- SMOKE GRAY
   CONTACT- 0.00127[.000050] MIN NICKEL OVER ENTIRE PART,
   0.00002[.000001] GOLD FLASH OVER ENTIRE PART,
   0.00127[.000050] MIN GOLD OVER CONTACT AREA.
   SHIELD: 0.00076[.000030] BRIGHT TIN OVER 0.00127[.000050] MIN NICKEL.

4. CABLES SHOULD MEET AMP DRAWING SPECIFICATIONS 520471-1.

5. INSERTION DEPTH INTO RECEPTACLE.

6. BULK CABLE ARE NOT AVAILABLE FROM AMP INC.

7. CABLES SHOULD MEET AMP DRAWING SPECIFICATIONS 520475-1.

8. CABLES SHOULD MEET AMP DRAWING SPECIFICATIONS 520477-1.

9. CABLES SHOULD MEET AMP DRAWING SPECIFICATIONS 520473-1.

10. FOR TERMINATION OF 24 AWG, 7 STRANDED, FLAT RIBBON CABLE WITH 1.27[.050] NOMINAL O.D. CONDUCTOR INSULATION PER LISTED DRAWING SPECIFICATIONS.

11. OBSOLETE PARTS: OBSOLETE CIS STREAMLINING PER D.RENAUD/D.SINISI

	K	J	H	G	NO OF POSN	KEY I.D. LETTER	PART NO
	32.11 [1.264]	24.76 [.975]	25.70 [1.012]	24.59 [.968]	16	E	8 5-1761184-6
	21.95 [.864]	14.60 [.575]	15.54 [.612]	14.43 [.568]	8	E	7 5-1761184-3
	19.40 [.764]	12.06 [.475]	13.00 [.512]	11.89 [.468]	6	E	9 5-1761184-2
	16.87 [.664]	9.52 [.375]	10.46 [.412]	9.35 [.368]	4	E	4 5-1761184-1
	16.87 [.664]	9.52 [.375]	10.46 [.412]	9.35 [.368]	4	D	4 4-1761184-1
OBSOLETE	21.95 [.864]	14.60 [.575]	15.54 [.612]	14.43 [.568]	8	C	7 3-1761184-3
11 OBSOLETE	19.40 [.764]	12.06 [.475]	13.00 [.512]	11.89 [.468]	6	C	9 3-1761184-2
	16.87 [.664]	9.52 [.375]	10.46 [.412]	9.35 [.368]	4	C	4 3-1761184-1
OBSOLETE	16.87 [.664]	9.52 [.375]	10.46 [.412]	9.35 [.368]	4	B	4 2-1761184-1
OBSOLETE	32.11 [1.264]	24.76 [.975]	25.70 [1.012]	24.59 [.968]	16	A	8 1-1761184-6
	21.95 [.864]	14.60 [.575]	15.54 [.612]	14.43 [.568]	8	A	7 1-1761184-3
	19.40 [.764]	12.06 [.475]	13.00 [.512]	11.89 [.468]	6	A	9 1-1761184-2
	16.87 [.664]	9.52 [.375]	10.46 [.412]	9.35 [.368]	4	A	4 1-1761184-1

THIS DRAWING IS A CONTROLLED DOCUMENT.

DIMENSIONS: mm [INCHES]

TOLERANCES UNLESS OTHERWISE SPECIFIED:
0 PLC ± -
1 PLC ± -
2 PLC ± 0.25 [.010]
3 PLC ± -
4 PLC ± -
ANGLES ± -

MATERIAL 2 FINISH 3

DWN B. MCMASTER 21APR04
CHK C. ROHDE 21APR04
APVD M. WALMSLEY 21APR04
PRODUCT SPEC 108-2047
APPLICATION SPEC 114-2086
WEIGHT -

TE Connectivity

NAME PLUG ASSY, FLAT CABLE, 50 SERIES, SDL

SIZE	CAGE CODE	DRAWING NO	RESTRICTED TO
A1	00779	C-1761184	-

CUSTOMER DRAWING SCALE 5:1 SHEET 1 OF 1 REV B