Feb.1.2018 Copyright 2018 HIROSE ELECTRIC CO., LTD. All Rights Reserved.

	COUNT	DESCRIPTION OF REVISIONS	BY	CHKD	DATE		COUNT	DESCRIPTION OF REVISIONS	BY	CHKD	DATE
△					. .	△					. .
△					. .	△					. .
△					. .	△					. .

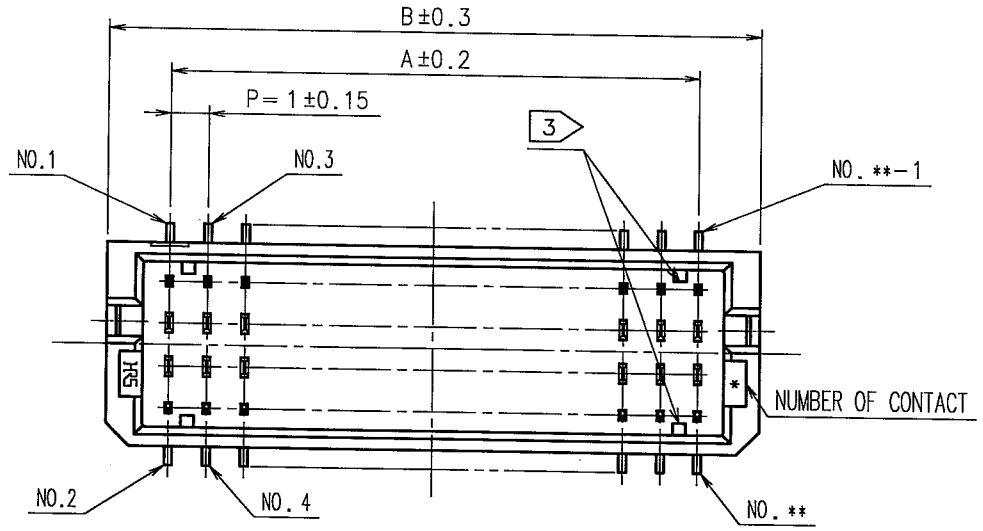

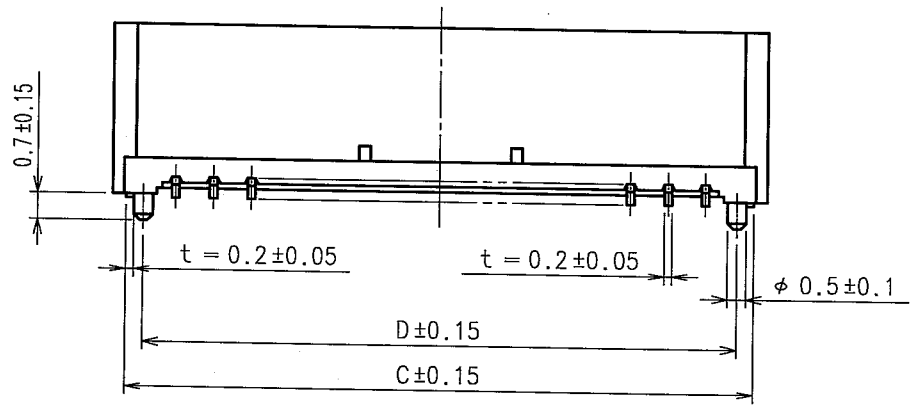

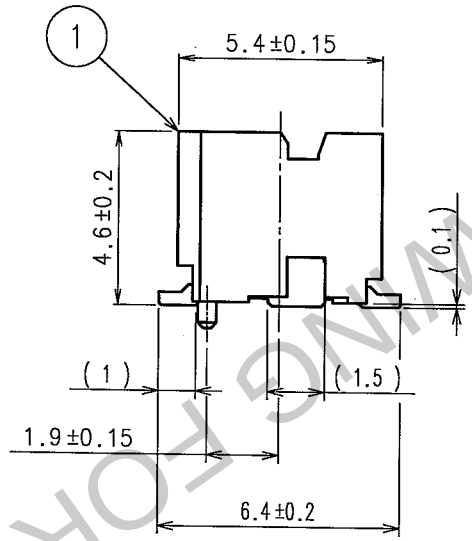

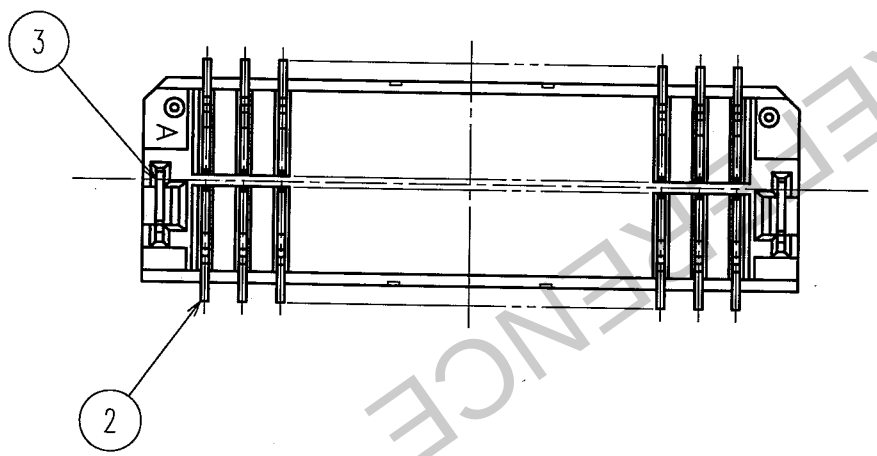

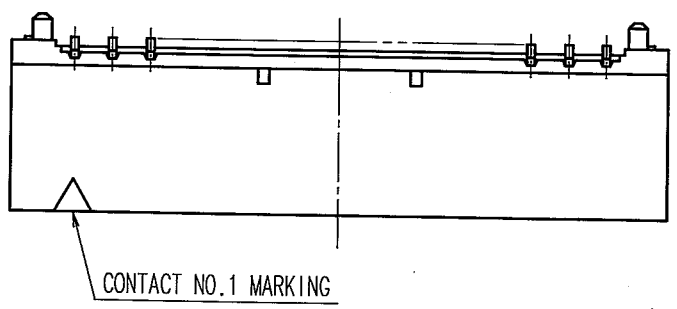

APPLICATION DIAGRAM(FREE)

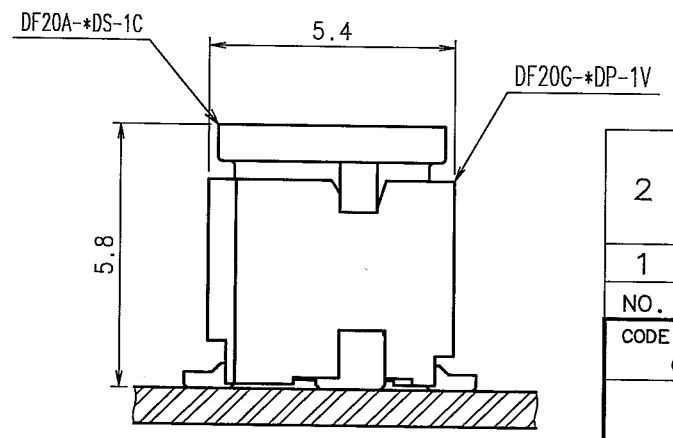

RECOMMENDED PATTERN(FREE)

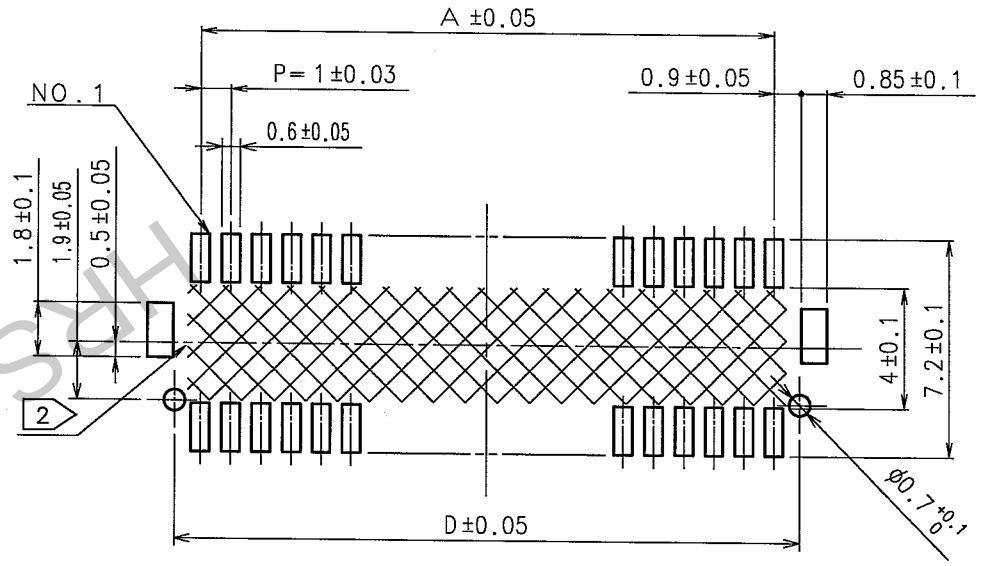

PART NO.	HRS NO.	NUMBER OF CONTACTS	A	B	C	D
DF20G-10DP-1V(56)	CL686-0037-6-56	10	4.0	7.3	6.6	5.7
DF20G-20DP-1V(56)	CL686-0038-9-56	20	9.0	12.3	11.6	10.7
DF20G-30DP-1V(56)	CL686-0039-1-56	30	14.0	17.3	16.6	15.7
DF20G-40DP-1V(56)	CL686-0040-0-56	40	19.0	22.3	21.6	20.7
DF20G-50DP-1V(56)	CL686-0041-3-56	50	24.0	27.3	26.6	25.7

NOTES1:LEAD CO-PLANARITY SHALL BE 0.1mm MAX INCLUDING METAL HOLD DOWN.
2> IF THERE IS PATTERN ON ▩ PART,THERE IS A POSSIBILITY THAT IT WILL MAKE CONTACT WITH THE LEADS.
3> THE NUMBER AND POSITION OF A RIB ARE AS FOLLOWS BY THE NUMBER OF CONTACTS.

10,20DP

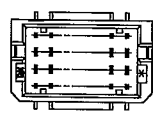

30,40DP

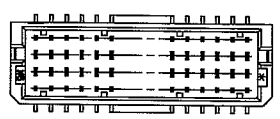

50DP

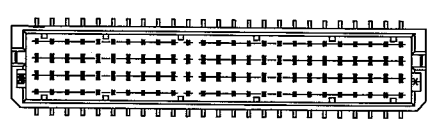

NO.	MATERIAL	FINISH, REMARKS
2	PHOSPHER BRONZE	CONTACT AREA:GOLD PLATED 0.2μm min. LEAD AREA:GOLD PLATED FLASH 0.03μm min. UNDER PRATING:NICKEL PLATED 2μm min.
1	POLYAMIDE	NATURAL(BEIGE),UL94V-0

NO.	MATERIAL	FINISH, REMARKS
6	POLYAMIDE	NATURAL(BEIGE),UL94V-0
5	POLYESTER	CLEAR(COVER TAPE)
4	PS	CLEAR(EMBOSSED CARRIER TAPE)
3	BRASS	SURFACE PLATING:TIN-COPPER PLATED 1μm min. UNDER PLATING:NICKEL PLATED 1μm min.

CODE NO.(OLD)	DRAWN	DESIGNED	CHECKED	APPROVED	RELEASED
CL	A.MIURA 05.08.08	T.Kumagawa '05.08.11	H.Umehara '05.08.11	T.Ono '05.08.12	. .

SCALE 5 : 1	DRAWING NO. EDC3-164847-02	PART NO. DF20G-*DP-1V(56)
UNITS mm	HRS HIROSE ELECTRIC CO., LTD	CODE NO. CL686- 1/2

FORM NO.229

TO

HRS DRAWING FOR REFERENCE

Feb.1.2018 Copyright 2018 HIROSE ELECTRIC CO., LTD. All Rights Reserved.

△の数 COUNT	DESCRIPTION OF REVISIONS	BY	CHKD	DATE	COUNT	DESCRIPTION OF REVISIONS	BY	CHKD	DATE
△				. .	△				. .
△				. .	△				. .
△				. .	△				. .

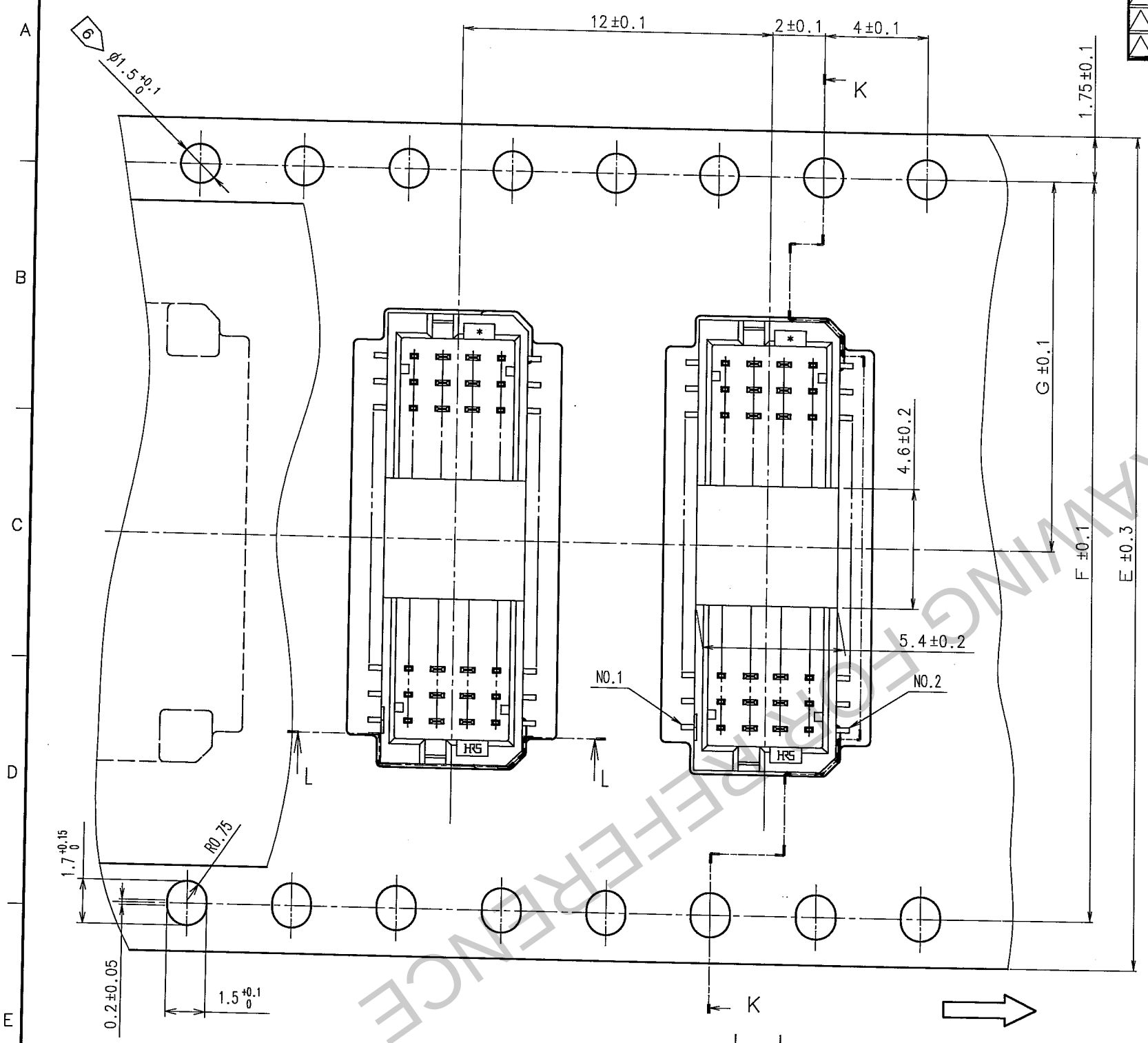

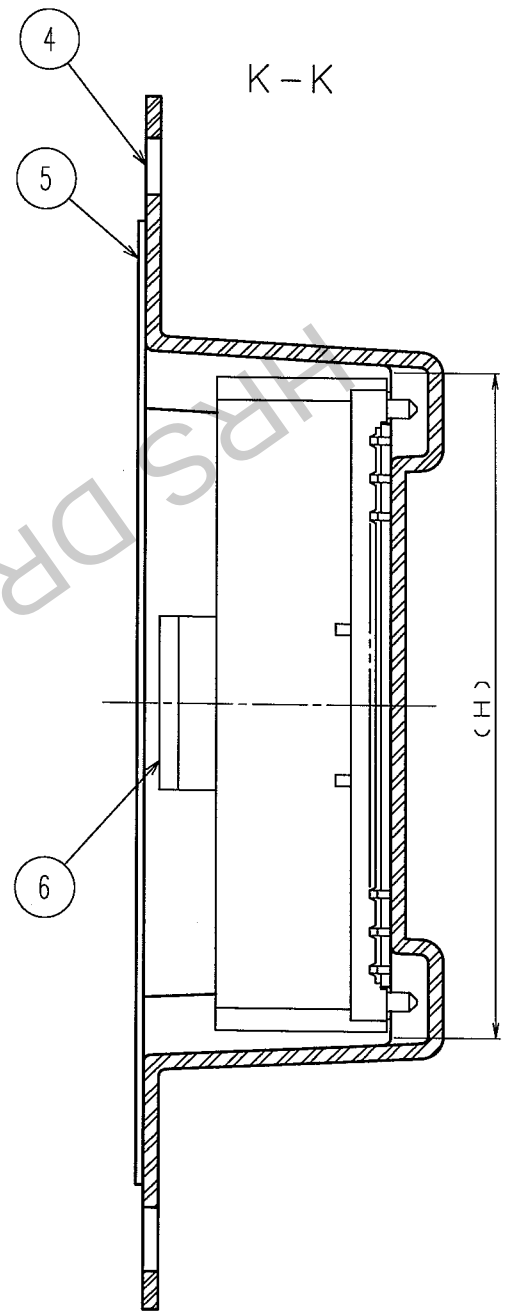

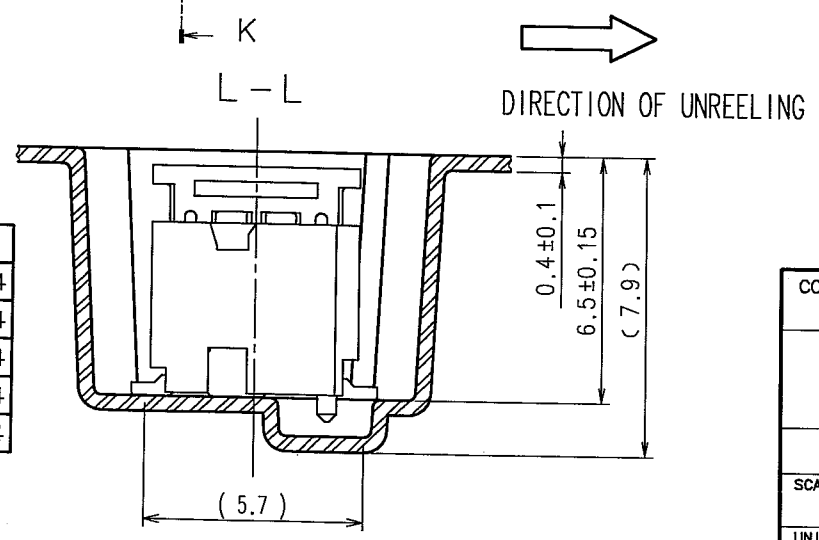

DIRECTION OF UNREELING

STYLE AND DIMENTION OF REEL(FREE)

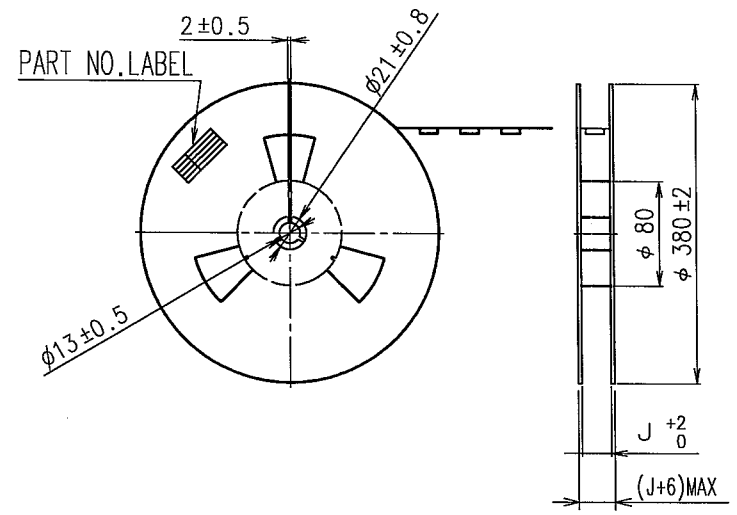

DETAIL OF PART NO.LABEL

SUPPLIER
QUANTITY
PART NO.
CODE NO.
DATE OF MANUFACTURED

生産月日	年　月　日
図　番	CL686-****-*-56
品　名	DF20G-*DP-1V(56)
納入数量	1000 Ko
納入者	ヒロセ電機(株)

NOTES4:PER REEL 1000 CONECTORS
5:AT THE BIGINING OF THE REEL, 30 CONPONENTS SHALL BE EMPTY.
AT THE END OF REEL, 20 COMPONENTS SHALL BE EMPTY.
6 WHEN THE TAPE WIDTH IS 16 OR 24mm,SPROCKET HOLES SHALL BE SET ON THE UPPER SIDE OF REEL AS SHOWN ON THIS DRAWING.

PART NO.	NUMBER OF CONTACTS	E	F	G	H	J
CL686-0037-6-56	10	16	−	7.5	7.6	16.4
CL686-0038-9-56	20	24	−	11.5	12.6	24.4
CL686-0039-1-56	30	32	28.4	14.2	17.6	32.4
CL686-0040-0-56	40	44	40.4	20.2	22.6	44.4
CL686-0041-3-56	50	44	40.4	20.2	27.6	44.4

TO

CODE NO.(OLD)	DRAWN	DESIGNED	CHECKED	APPROVED	RELEASED
CL	A.MIURA 05.08.08	T.Kumagawa '05.08.11	H.Umehara '05.08.11	T.Ona '05.08.12	. .

SCALE 5 : 1
UNITS mm

DRAWING NO. EDC3-164847-02

HRS HIROSE ELECTRIC CO., LTD

PART NO. DF20G-*DP-1V(56)

CODE NO. CL686-

2/

FORM NO.229

HRS DRAWING FOR REFERENCE