THIS DRAWING IS UNPUBLISHED. RELEASED FOR PUBLICATION 20
© COPYRIGHT 20 BY TYCO ELECTRONICS CORPORATION. ALL RIGHTS RESERVED.

LOC	DIST
FT	0

REVISIONS

P	LTR	DESCRIPTION	DATE	DWN	APVD
	A	RELEASED	-	-	-

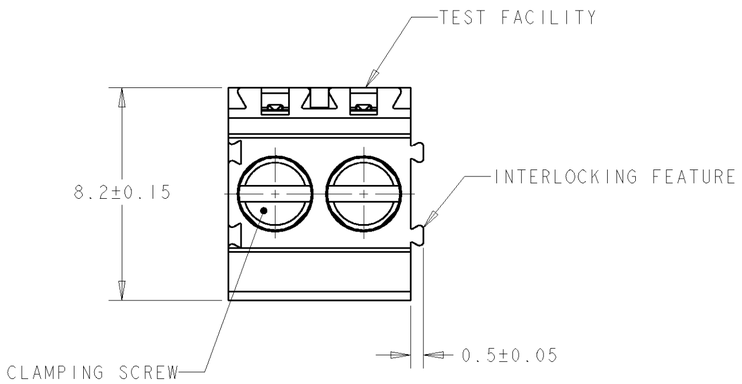

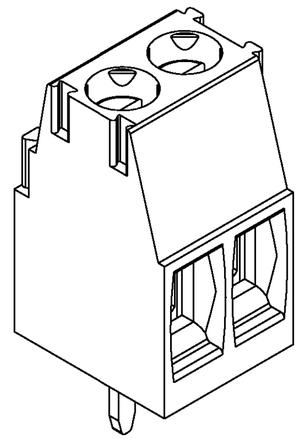

1546227-2 AS SHOWN

1. MATERIALS AND FINISH
   HOUSING : PA 6.6, UL 94-V0, COLOR: BLUE.
   CLAMP : BRASS, NICKEL PLATED
   TERMINAL : BRASS, TIN PLATED
   CLAMPING SCREW : M3, BRASS, NICKEL PLATED
2. SUITABLE FOR 1.6-2.4 mm. PC BOARD THICKNESS.
3. END-TO-END STACKABLE W/INTERLOCK WITHOUT LOSS OF CENTERLINE SPACING
4. WIRE SIZE RANGE: 14 - 30 AWG

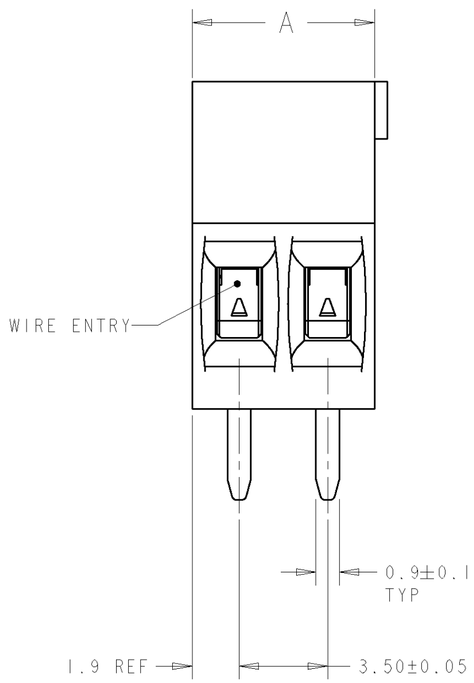

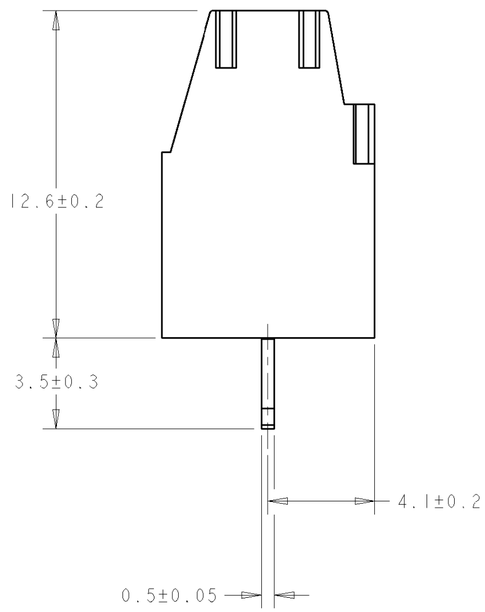

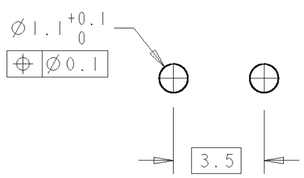

RECOMMENDED PC BOARD LAYOUT

A	NO OF POSN	PART NUMBER
87.5	25	2-1546227-5
84.0	24	2-1546227-4
80.5	23	2-1546227-3
77.0	22	2-1546227-2
73.5	21	2-1546227-1
70.0	20	2-1546227-0
66.5	19	1-1546227-9
63.0	18	1-1546227-8
59.5	17	1-1546227-7
56.0	16	1-1546227-6
52.5	15	1-1546227-5
49.0	14	1-1546227-4
45.5	13	1-1546227-3
42.0	12	1-1546227-2
38.5	11	1-1546227-1
35.0	10	1-1546227-0
31.5	9	1546227-9
28.0	8	1546227-8
24.5	7	1546227-7
21.0	6	1546227-6
17.5	5	1546227-5
14.0	4	1546227-4
10.5	3	1546227-3
7.0	2	1546227-2

THIS DRAWING IS A CONTROLLED DOCUMENT FOR TYCO ELECTRONICS CORPORATION. IT IS SUBJECT TO CHANGE AND THE CONTROLLING ENGINEERING ORGANIZATION SHOULD BE CONTACTED FOR THE LATEST REVISION

DIMENSIONS: mm

TOLERANCES UNLESS OTHERWISE SPECIFIED:
0 PLC ±-
1 PLC ±.3
2 PLC ±.25
3 PLC ±-
4 PLC ±-
ANGLES ±2

MATERIAL -
FINISH -

DWN	S.WELDON	11MAR2004
CHK	C.RICHARD	11MAR2004
APVD	C.RICHARD	11MAR2004

PRODUCT SPEC 108-20166
APPLICATION SPEC 114-20079
WEIGHT -

BUCHANAN
Tyco Electronics
Harrisburg, PA 17105-3608

NAME TERMINAL BLOCK ASSEMBLY, PCB MOUNT, SIDE WIRE ENTRY, STACKING W/ INTERLOCK, 3.5mm PITCH

SIZE	CAGE CODE	DRAWING NO	RESTRICTED TO
A2	00779	C-1546227	-

CUSTOMER DRAWING | SCALE 6:1 | SHEET 1 OF 1 | REV A

AMP 1471-9 REV 31MAR2000

Pro/ENGINEER DRAWING