THIS DRAWING IS UNPUBLISHED. RELEASED FOR PUBLICATION -,- .
© COPYRIGHT - BY TYCO ELECTRONICS CORPORATION. ALL RIGHTS RESERVED.

LOC	DIST
AD	25

REVISIONS

P	LTR	DESCRIPTION	DATE	DWN	APVD
	O	RELEASE PER EC 0S12-0082-05	03JUN05	JDP	AMS

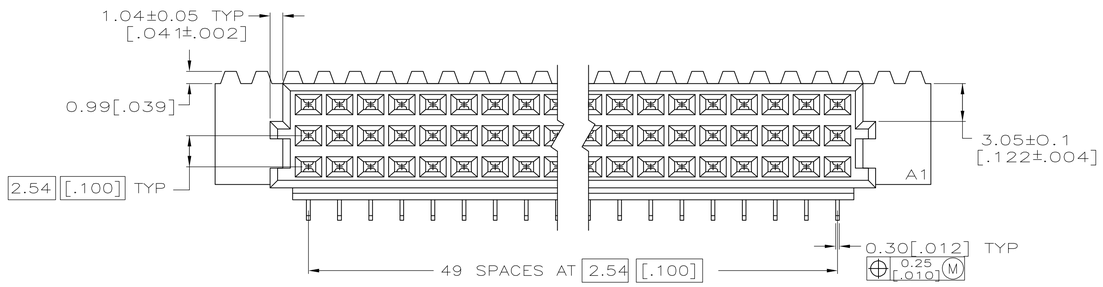

1. HOUSING MATERIAL: GLASS-FILLED POLYMER.
2. CONTACT MATERIAL: COPPER ALLOY.
3. CONTACT FINISH: DIN 41612 CLASS 2 IN CONTACT AREA. TIN PLATE ON POSTS.
4. COMPLIANT PIN REQUIRES 1.57[.062] MINIMUM THICK PC BOARD. RECOMMENDED PC BOARD HOLES ARE Ø1.151±0.025[.0453±.0010] DRILLED HOLES WITH 0.02-0.08[.001-.003] COPPER AND 0.008[.0003] MINIMUM TIN-LEAD PLATING. FINISHED HOLES AFTER PLATING, Ø0.94-1.09[.037-.043].
5. PART NUMBER, DATE CODE IDENTIFICATION, CSA LOGO, THIS APPROXIMATE AREA.
6. CONTACT POINT.
7. MARKING ON THIS SIDE.

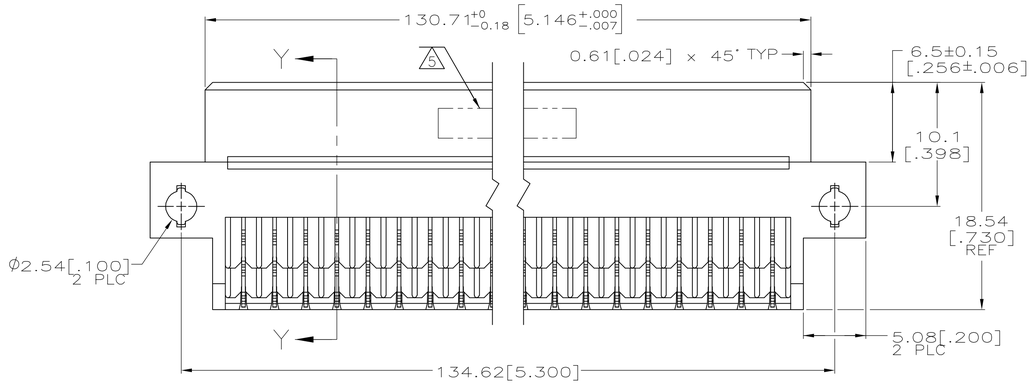

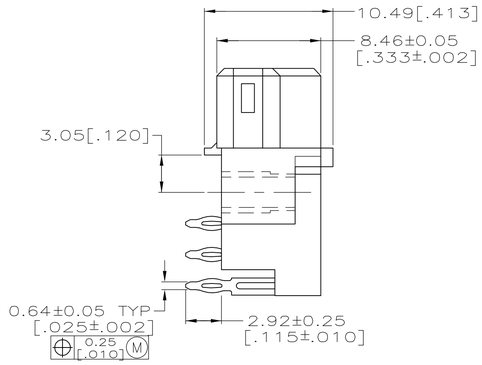

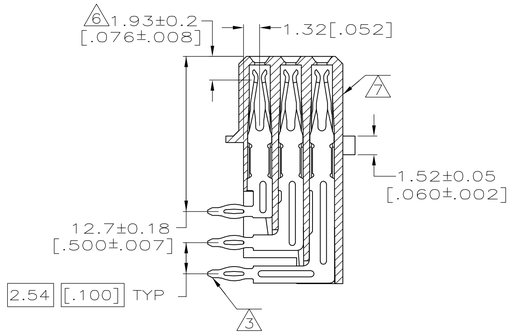

SECTION Y-Y

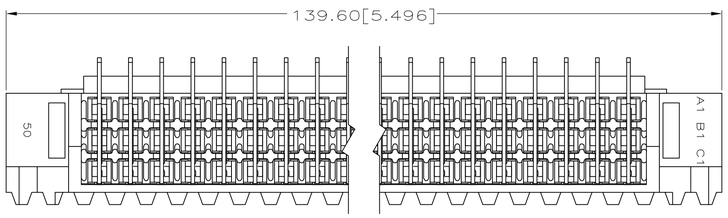

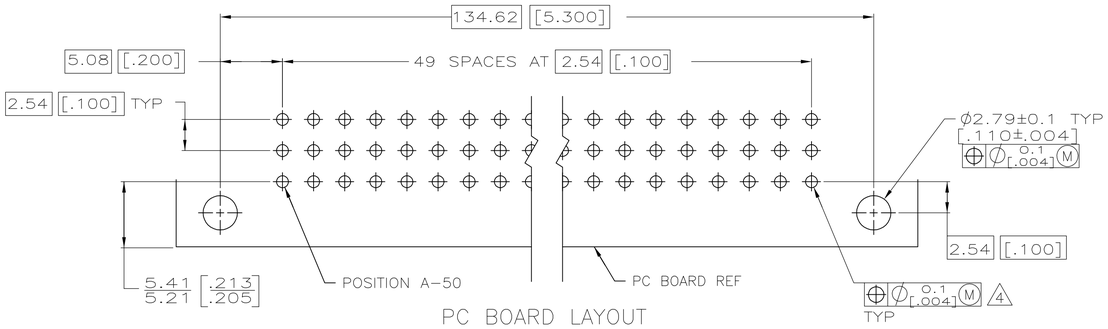

PC BOARD LAYOUT

5148295-5
PART NUMBER

THIS DRAWING IS A CONTROLLED DOCUMENT.	DWN J. POLIGNONE 03JUN05	tyco Electronics	Tyco Electronics Corporation Harrisburg, PA 17105-3608
DIMENSIONS: mm [INCHES]	CHK A. SHARPE 03JUN05		
TOLERANCES UNLESS OTHERWISE SPECIFIED: 0 PLC ± - 1 PLC ± - 2 PLC ± 0.13[.005] 3 PLC ± - 4 PLC ± - ANGLES ± -	APVD A. SHARPE 03JUN05	NAME	ASSEMBLY, RECEPTACLE, EUROCARD,TYPE R, 150 POSITION, 2.92[.115] PRESS-FIT
	PRODUCT SPEC —		
	APPLICATION SPEC —	SIZE A1	CAGE CODE 00779
MATERIAL 1 2	WEIGHT —	DRAWING NO C-5148295	RESTRICTED TO —
FINISH 3	CUSTOMER DRAWING	SCALE 4:1	SHEET 1 OF 1 REV O

AMP 4805 REV 31MAR2000