SHEET OF

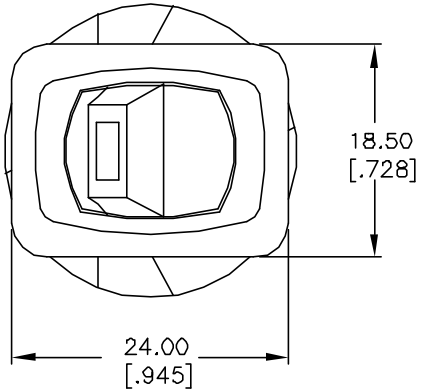

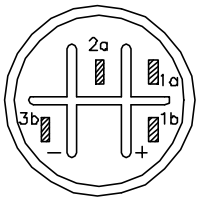

SECTION A–A

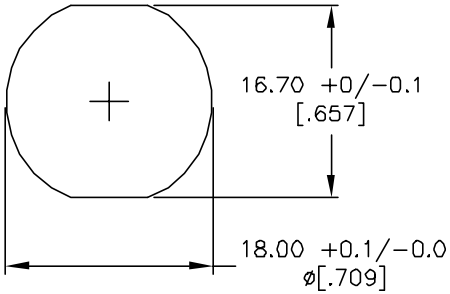

RECOMMEND PANEL MOUNTING

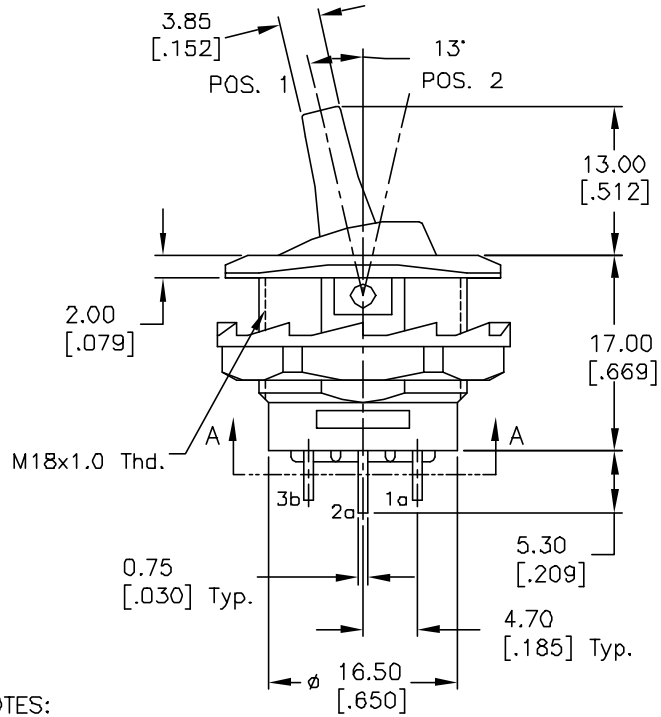

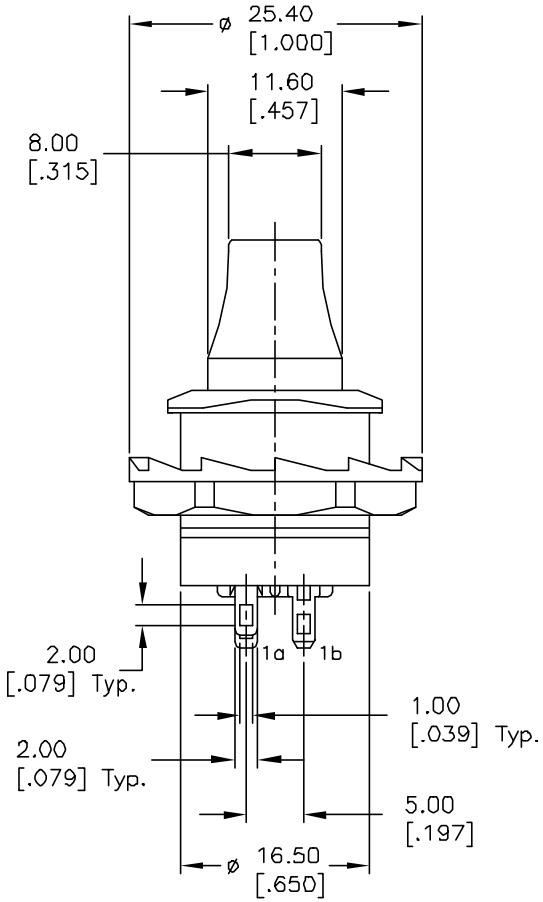

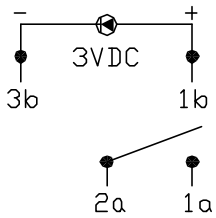

CIRCUIT: 4P; SPST
CONTACT CONFIGURATION

SWITCH FUNCTION	
POS. 1	POS. 2
ON	OFF
2a-1a	OPEN

NOTES:

1. ALL DIMENSIONS IN MM [INCH]
2. GENERAL TOLERANCE: 0.0=±0.4
   0.00=±0.25
3. TERM. NOS. FOR REF. ONLY
4. RATING: 10A 125V 6A 250V AC
5. CONTACT RESISTANCE: 50m ohm max.
6. INSULATION RESISTANCE: DC 500V, 100M ohm min.
7. DIELECTRIC STRENGTH: AC 1500V 1 minute

REV.	ECN No.	DESCRIPTION	DATE	CHKD
A	10520	RELEASED FOR PRODUCTION		

THE INFORMATION CONTAINED IN THIS DOCUMENT IS PROPRIETARY TO E-SWITCH AND IS NOT TO BE COPIED OR TRANSFERRED

E-SWITCH®

TITLE RR3405AL-GRN

SCALE	DATE	DR	DWG	REV
1.5:1	2/8/00	MM	F030008	A