Part Number:	**BU-60HPR-***
Description:	**Phone Tip Alligator Clip with Acetate Handle**

3707

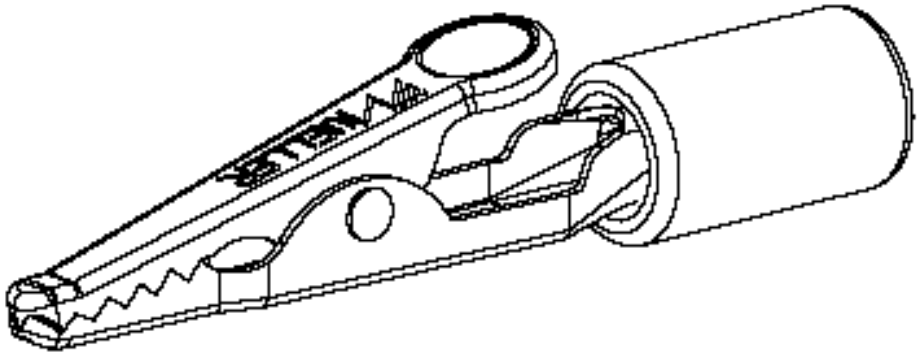

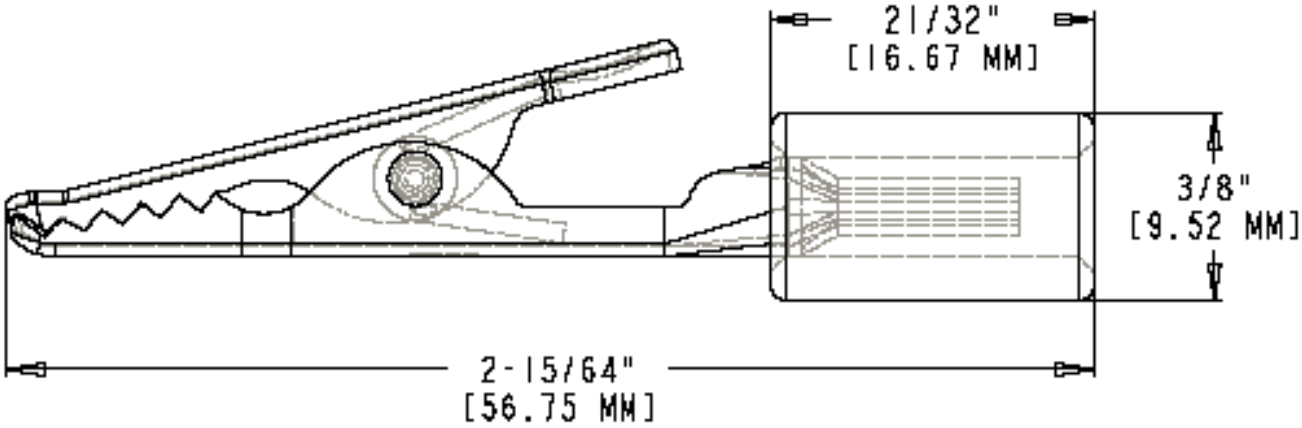

- Phone Tip Alligator Clip with Acetate Handle
- Accepts standard phone tip or test prob tip
- Material: Nickel-plated steel clip; tenite acetate insulated handle
- Length: 2.23” (56.75 mm)
- *Std.Colors: -0 Black, -2 Red, -4 Yellow, -5 Green, -6 Blue, -9 White
- Rating: 10 Amps
- RoHS Compliant

Mueller Electric Company
1625 E. 31st Street
Cleveland, Ohio 44114

ISO 9001:2000
Over 95 Years Of Innovation
www.muellerelectric.com

TEL. 800-955-2629
TEL. 216-771-5225
FAX. 216-771-3068

Mouser Electronics

Authorized Distributor

Click to View Pricing, Inventory, Delivery & Lifecycle Information:

Mueller Electric:

BU-60HPR-6