MICRO SWITCH
FREEPORT, ILLINOIS, U.S.A.
A DIVISION OF HONEYWELL
FED. MFG. CODE 91929

ASSEMBLY - TOGGLE SWITCH

CATALOG LISTING
68AT22 SERIES
CHART 2

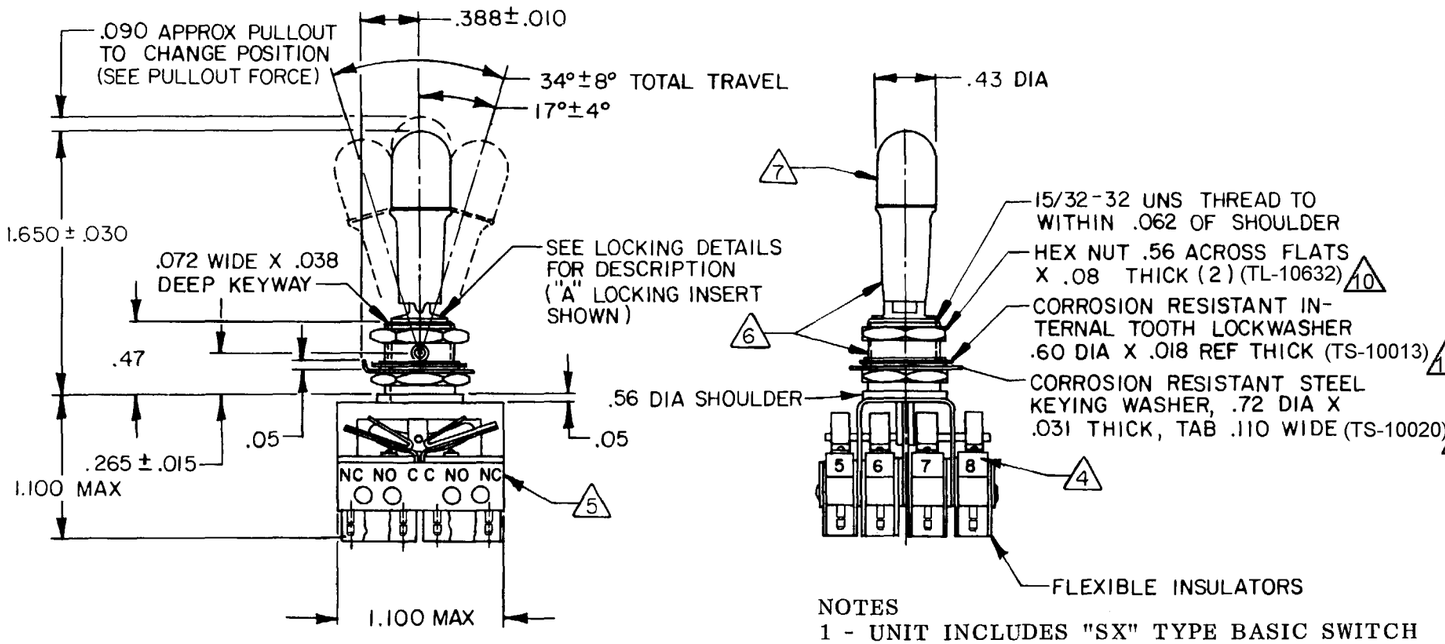

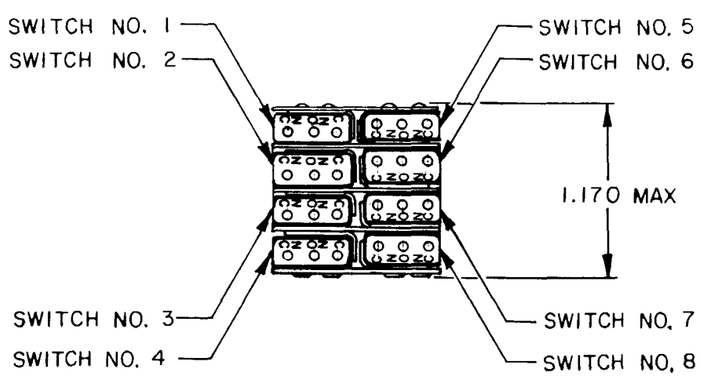

CATALOG LISTING 8	KEYWAY POSITION C-NO	KEYWAY POSITION C-NC	CENTER POSITION C-NO	CENTER POSITION C-NC	OPPOSITE KEYWAY POSITION C-NO	OPPOSITE KEYWAY POSITION C-NC	RECOMMENDED LOCKING COMBINATIONS
68AT22-1	5,6,7,8	1,2,3,4	NONE	ALL	1,2,3,4	5,6,7,8	A,B,D,E,F,G,H,J,K,L,M,N,P
68AT22-3	5,6,7,8	1,2,3,4	NONE	NONE	1,2,3,4	5,6,7,8	D,F,G
68AT22-5	5,6,7,8*	1,2,3,4*	NONE	ALL	1,2,3,4	5,6,7,8	E,F,K,L,M,N
68AT22-7	5,6,7,8*	1,2,3,4*	NONE	ALL	1,2,3,4*	5,6,7,8*	E,L,N

* ASTERISK DENOTES MOMENTARY POSITION

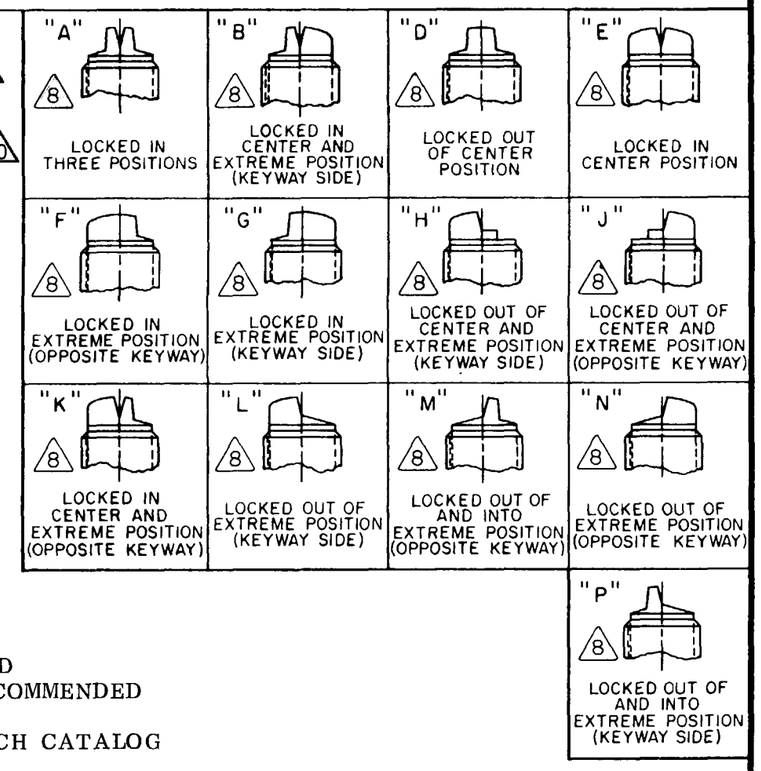

NOTES
1 - UNIT INCLUDES "SX" TYPE BASIC SWITCH (8) (MEETS REQUIREMENTS OF MIL-PRF-8805/4)
2 - SWITCHES DO NOT NECESSARILY OPERATE SIMULTANEOUSLY
3 - PLATED TERMINALS WILL ACCEPT "AMP INC." .058 DIA PIN RECEPTACLES
4 SWITCH NUMBERS MARKED ON END OF BASIC SWITCHES
5 TERMINAL DESIGNATION STAMPED ON BOTH SIDES OF UNIT
6 DULL FINISH ON LEVER AND BUSHING
7 FLAT WHITE RESILIENT SILICONE (50 DUROMETER APPROX)
8 SUFFIX LETTER MUST BE ADDED FOR DESIRED TYPE TOGGLE LOCKING (SEE CHART FOR RECOMMENDED LOCKING COMBINATIONS)
9 - FOR REPLACEMENT BUTTON SEE MICRO SWITCH CATALOG LISTING 15PA90-6W
10 HARDWARE FURNISHED ASSEMBLED WITH SWITCH OR IN PACKET 15PA313-AT PER MIL-PRF-8805
11 - REPLACEMENT MOUNTING HARDWARE PACKET 15PA313-AT
12- SWITCH MEETS THE REQUIREMENTS OF MIL-PRF-8805/98 EXCEPT INITIAL CONTACT RESISTANCE IS 50 MILLIOHMS MAX AND FINAL CONTACT RESISTANCE AFTER MECHANICAL ENDURANCE IS 600 MILLIOHMS MAX.

THIS DRAWING COVERS A PROPRIETARY ITEM AND IS THE PROPERTY OF MICRO SWITCH, A DIVISION OF HONEYWELL. THIS DRAWING IS NOT TO BE COPIED OR USED WITHOUT THE APPROVAL OF MICRO SWITCH.

CHARACTERISTICS	ELECTRICAL DATA
PULLOUT FORCE - - - - - 3 LB MIN - 5 LB MAX	CONTACT ARRANGEMENT: S P D T (8)

SCALE FULL
DO NOT SCALE PRINT
TOLERANCES
APPLY TO DESIGN UNITS. CONVERSIONS ARE ONLY FOR REFERENCE. UNLESS NOTED, TOLERANCES ARE ±

	DIM. mm	TOL. mm/in	DIM. in	TOL. mm/in
NO PLACES	X	1/.04		
ONE PLACE	X.X	0.4/.016	X.X	0.8/.03
TWO PLACES	X.XX	0.16/.006	X.XX	0.38/.015
THREE PLACES			X.XXX	0.13/.005
ANGLES				

DESIGN UNITS: SI METRIC ☐ US CUSTOMARY ■
THIRD ANGLE PROJECTION
WEIGHT .11 LB APPROX

ELECTRICAL RATINGS

LOAD	SEA LEVEL 28 Vdc (AMPERES)	SEA LEVEL 115 Vac, 60 Hz (AMPERES)	50,000 FT 28 Vdc (AMPERES)
RESISTIVE	7	7	4
INDUCTIVE	4	7	2.5

CATALOG LISTING 68AT22 SERIES CHART 2
PAGE 1 OF 1
ISSUE 8 M
11 FEB 04
MDM
CHECK
REPLACES
RELEASE NO. PR-11029

REVISIONS
A CO-515968 KAG 12 OCT 83
B C072702 LJF 9 JUN 92
C C081168 JALA 12 OCT 95
D CO-95233 JJA 6 JULY 99
E 203961 CSL 20 SEP 01
F 204763 GJW 28 JAN 02
G 0003376 AS 11 FEB 04

RASTER
DRAWN TSK 15 MARCH 82