THIS DRAWING IS UNPUBLISHED. RELEASED FOR PUBLICATION ,19 .
© COPYRIGHT 19 BY AMP INCORPORATED. ALL RIGHTS RESERVED.

LOC	DIST
J	00

REVISIONS

P	LTR	DESCRIPTION	DATE	DWN	APVD
	P	REVISED ECR-08-032553	23DEC08	AZ	SY

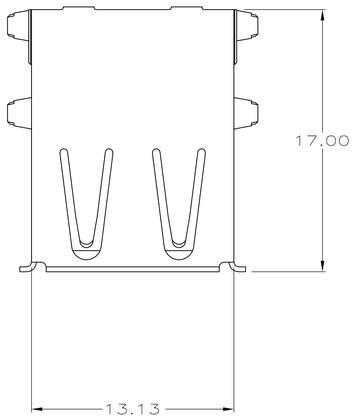

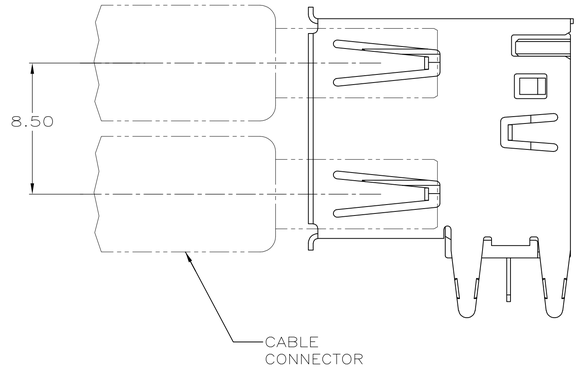

1. MATERIAL:
   SHELL & CONTACTS- COPPER ALLOY.
   HOUSING- UL 94V-0 RATED, THERMOPLASTIC, SEE TABLE.
2. PLATING:
   CONTACTS- 0.076µm MINIMUM GOLD OVER 0.76µm MINIMUM PALLADIUM-NICKEL ON MATING AREA. OR CONTACT ALTRENATE PLATING 0.76µm MINIMUM GOLD ON MATING AREA.
   3.80µm MINIMUM TIN-LEAD ON SOLDER TAILS.
   BOTH OVER 1.27µm MINIMUM NICKEL.
   SHELL: 5.10µm MINIMUM BRIGHT TIN
   OVER 2.50µm MINIMUM COPPER.
3. DATUM AND BASIC DIMENSIONS ESTABLISHED BY CUSTOMER.
4. RECOMMENDED PC BOARD THICKNESS OF 1.57.
5. PLATING:
   CONTACTS- 0.127µm MINIMUM GOLD ON MATING AREA,
   3.80µm MINIMUM TIN-LEAD ON SOLDER TAILS.
   ALL OVER .76µm MINIMUM NICKEL ON ENTIRE CONTACT.
   SHELL: 5.10µm MINIMUM BRIGHT TIN
   OVER 2.50µm MINIMUM COPPER.
6. PACKAGED IN TRAYS
7. PACKAGED IN TUBES

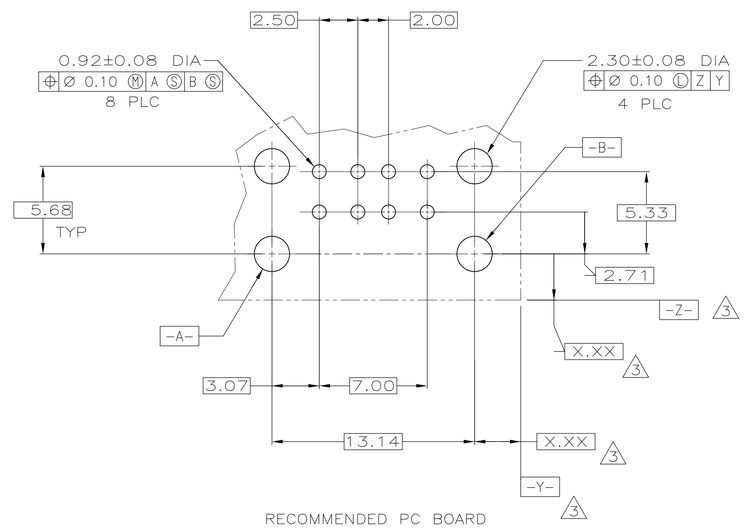

RECOMMENDED PC BOARD MOUNTING DIMENSIONS
4

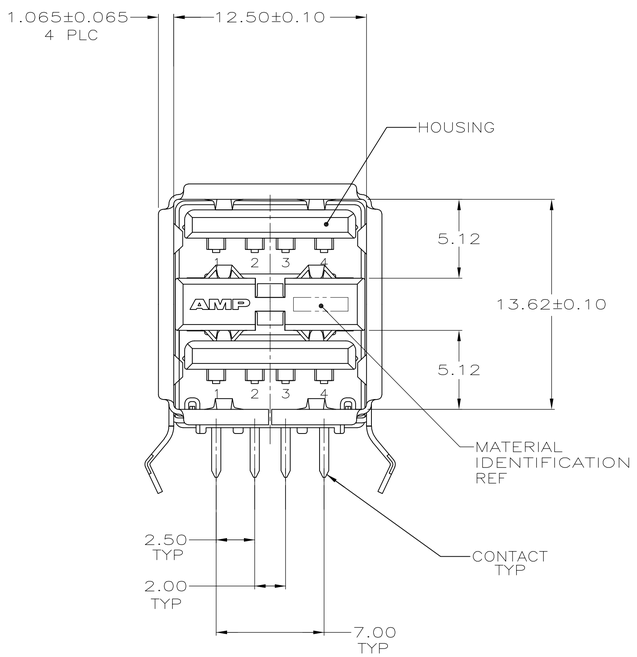

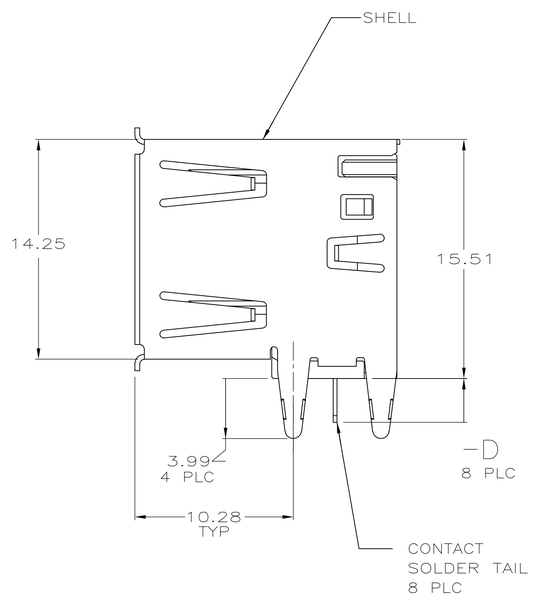

	PACKAGING	PLATING	HIGH TEMPERATURE COMPATIBLE	D	HOUSING COLOR	PART NUMBER
OBSOLETE	7	2	NO	2.84±0.25	BLACK	787617-8
	6	5	NO	2.84±0.25	BLACK	787617-7
	6	2	YES	2.84±0.25	NATURAL	787617-6
OBSOLETE	6	2	YES	2.29±0.25	BLACK	787617-5
OBSOLETE	6	2	YES	2.84±0.25	BLACK	787617-4
OBSOLETE	6	2	NO	2.84±0.25	NATURAL	787617-3
OBSOLETE	6	2	NO	2.29±0.25	BLACK	787617-2
OBSOLETE	6	2	NO	2.84±0.25	BLACK	787617-1

THE DRAWING IS A CONTROLLED DOCUMENT FOR AMP INCORPORATED. IT IS SUBJECT TO CHANGE AND CONTROL AND ENGINEERING ORGANIZATION SHOULD BE CONTACTED FOR THE LATEST REVISION.

DIMENSIONS: mm

TOLERANCES UNLESS OTHERWISE SPECIFIED:
0 PLC ±-
1 PLC ±-
2 PLC ±0.13
3 PLC ±-
4 PLC ±-
ANGLES -

MATERIAL 1

FINISH SEE CHART

DWN M.E.SHIRK 24 MAY 95
CHK W.DAVIS 25 MAY 95
APVD R.WALTER 08 NOV 95
PRODUCT SPEC -
APPLICATION SPEC -
WEIGHT -

AMP Incorporated
Harrisburg, PA 17105-3608

NAME RECEPTACLE ASSEMBLY, RIGHT ANGLE, STACKED, THRU-HOLE, USB

SIZE A1 | CAGE CODE 00779 | DRAWING NO C-787617

CUSTOMER DRAWING | SCALE 5:1 | SHEET 1 OF 1 | REV P