REV.	DESCRIPTION	DATE	APPROVED
D	Engineering Update w/o Changes	02/24/04	M. C.
E	Tolerance Update.	09/28/06	M. C.
F	Updated Material.	10/28/08	T. Y.
G	Added Ordering Information.	06/06/11	T. Y.

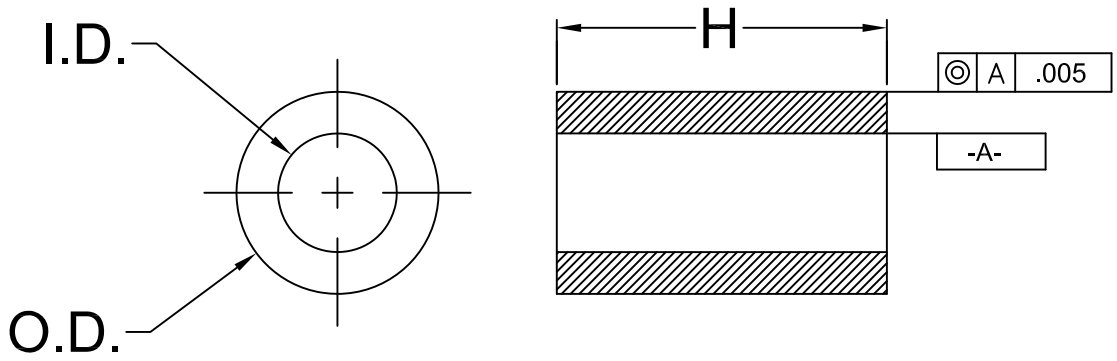

SERIES	"H" DIMENSION	I.D.	O.D.
901	.030-1.250 (.76-31.8)	.028 (.71)	.085 (2.2)
902	.030-1.250 (.76-31.8)	.032 (.81)	.125 (3.2)
903	.030-1.250 (.76-31.8)	.047 (1.2)	.156 (4.0)
904	.030-1.250 (.76-31.8)	.063 (1.6)	.187 (4.7)
905	.030-1.250 (.76-31.8)	.147 (3.7)	.250 (6.4)
906	.030-1.250 (.76-31.8)	.085 (2.2)	.148 (3.8)
907	.030-1.250 (.76-31.8)	.105 (2.7)	.167 (4.2)
908	.030-1.250 (.76-31.8)	.125 (3.2)	.187 (4.7)
910	.030-1.250 (.76-31.8)	.091 (2.3)	.250 (6.4)
911	.030-1.250 (.76-31.8)	.125 (3.2)	.250 (6.4)
912	.030-1.250 (.76-31.8)	.171 (4.3)	.250 (6.4)
913	.030-1.250 (.76-31.8)	.091 (2.3)	.187 (4.7)
937	.030-1.250 (.76-31.8)	.090 (2.3)	.125 (3.2)
938	.030-1.250 (.76-31.8)	.032 (.81)	.085 (2.2)
939	.030-1.250 (.76-31.8)	.047 (1.2)	.125 (3.2)
940	.030-1.250 (.76-31.8)	.063 (1.6)	.156 (4.0)
941	.030-1.250 (.76-31.8)	.135 (3.4)	.230 (5.8)

ORDERING INFORMATION:

9XX-XXX

SERIES — LENGTH

INCHES, MULTIPLES OF .005"
.030" = 030
.100" = 100
1.250" = 1.250

WHOLE MILLIMETERS
2mm = 2MM
5mm = 5MM

3. TOLERANCE "H" DIMENSION:
   0.030 - 0.500 (1.0 - 12.7mm)±0.005(0.1mm)
   0.505 - 0.750 (12.8 - 19.1mm)±0.008(0.2mm)
   0.755 - 1.250 (19.2 - 31.8mm)±0.015(0.4mm)
2. MATERIAL: NYLON 6, ULTRAMID 8270 HS, NATURAL. BIVAR MATERIAL CODE 01-NL-WE.
   ALLIED CHEMICAL POLYAMID NYLON 6 WITH CLARIANT CNY02655 WHITE NYLON CONCENTRATE.
1. GENERAL SPECIFICATIONS: BIVAR EXTRUDED PRODUCT SPECIFICATION BV00-E103.

STANDARD TOLERANCE
(UNLESS OTHERWISE SPECIFIED)

DECIMALS		ANGULAR	
.X	± .1	X°	± 1°
.XX	± .01		
.XXX	± .005		

BIVAR®
4 THOMAS, IRVINE, CA. 92618
TEL: (949) 951-8808 FAX: (949) 951-3974

TITLE: NYLON TUBE SPACERS

DESIGNED:	DATE:	PART NO:	REVISION:
Michael Chen	01/13/03	9XX-XXX	G
CHECKED: D. Green	DATE: 01/13/03	CAGE CODE : 32559	SHEET # 1 OF 1

CAD GENERATED DOCUMENT, DO NOT MEASURE DRAWING.

Mouser Electronics

Authorized Distributor

Click to View Pricing, Inventory, Delivery & Lifecycle Information:

BIVAR:

939-125 903-315 903-320 903-330 911-175 939-170 904-300 905-350 906-160 901-020 901-030 901-035 901-040 901-045 901-050 901-055 901-060 901-065 901-070 901-075 901-080 901-085 901-090 901-095 901-1.000 901-1.065 901-1.125 901-1.180 901-1.250 901-100 901-105 901-10MM 901-110 901-115 901-11MM 901-120 901-125 901-12MM 901-130 901-135 901-13MM 901-140 901-145 901-150 901-155 901-15MM 901-160 901-165 901-16MM 901-170 901-175 901-177 901-17MM 901-180 901-185 901-18MM 901-190 901-195 901-19MM 901-1MM 901-200 901-205 901-20MM 901-210 901-215 901-21MM 901-220 901-225 901-22MM 901-230 901-235 901-240 901-245 901-250 901-255 901-260 901-265 901-270 901-275 901-280 901-285 901-290 901-295 901-2MM 901-305 901-310 901-315 901-320 901-325 901-330 901-335 901-355 901-360 901-365 901-370 901-375 901-380 901-385 901-390 901-395