# 642020-ENV

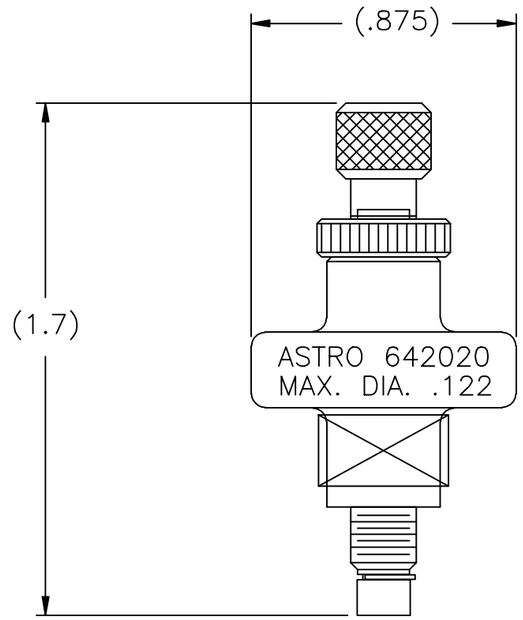


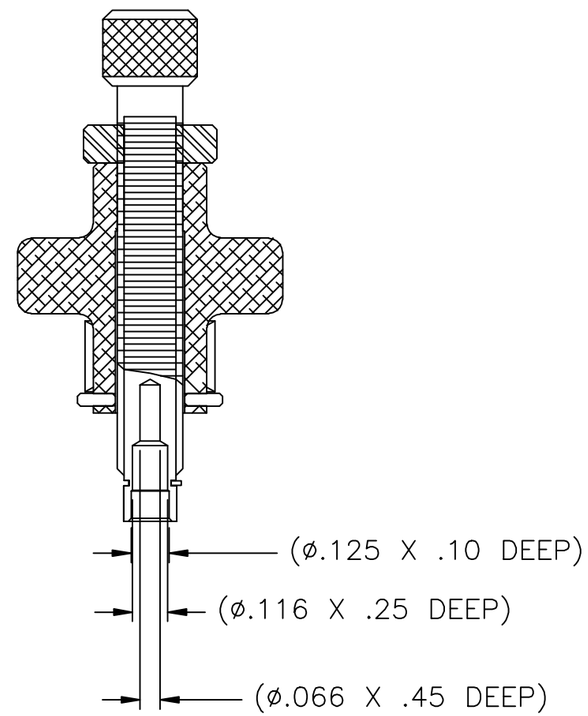


UNCONTROLLED DOCUMENT
WILL NOT BE UPDATED

NOTES:
1. THIS IS AN AUTOCAD DRAWING DO NOT CHANGE MANUALLY.
2. FOR USE WITH 616336 (M22520/7-01)
3. COLOR CODE: GREEN.
4. FOR CONTACTS WITH MAX. DIA. .122.

| REV. | DESCRIPTION | BY | DATE | APR. |
|---|---|---|---|---|
| A | NEW RELEASE. | DYO | 06-01-12 | MMK |

THESE DRAWINGS, SPECIFICATIONS OR OTHER DATA ARE AND REMAIN, THE PROPERTY OF ASTRO TOOL CORP. AND MUST BE RETURNED UPON REQUEST. THEY CONTAIN INFORMATION OWNED AND/OR DEVELOPED BY ASTRO AT ITS OWN PRIVATE EXPENSE AND MAY NOT BE USED, DUPLICATED OR DISCLOSED TO OTHERS, IN WHOLE OR IN PART FOR DESIGN, MANUFACTURE OR PROCUREMENT WITHOUT THE WRITTEN PERMISSION OF ASTRO TOOL CORP. EACH AND EVERY TIME.

SCALE: N.T.S.
DWN BY: DYO
DATE: 06-01-12
APPROVED:

UNLESS OTHERWISE SPECIFIED:
DECIMALS:
.XXX ± .005
.XX ± .010
.X ± .030
ANGLES:
± 1°

ASTRO TOOL CORP.
21615 S.W. TUALATIN VALLEY HWY., BEAVERTON OR 97006

CAGE 58164

DESCRIPTION: ENVELOPE DRAWING: 642020
UNIVERSAL ADJUSTABLE POSITIONER ASS'Y

PART NO. B 642020-ENV