DIGI KEY 御中

Issued Date	23/08/2005
No.	T11S-05017

REVISION INFORMATION LETTER FOR PRODUCT SPECIFICATION FOR INFORMATION 納入仕様書改訂連絡書

Part Name 製品名	CHIP CHOKE COIL
Part No. 品番	ELL8UV□□□□ Our Part No. 当方品番 [ELL8UV□□□□]
Used Model or Spec.No 使用機種又は仕様書番号	T1S-05013A
Reasons for Change 変更理由	**Include additional inductance value 6.2uH, 33uH and 220uH.**
Details 変更内容	**Include additional inductance value 6.2uH, 33uH and 220uH.** **Part No: ELL8UV6R2N, ELL8UV330M and ELL8UV221M.**
Effective Date & Method of Change 実施時期および方法	Our request date and method of the change are as follows. **AUGUST 2005** より実施希望 — 間にて別途調整
Attached Sheets 添付資料 [Yes . No 有 無]	・Spec 規格書 9 sheets 枚 (スペック・マテリアルリスト) ・Drawing 図面 sheets 枚 (外観図・構造図・付属書) ・Test Data 試験データー sheets 枚 ( ) ・etc. その他 sheets 枚 (表紙・生産工場・etc.) ・Number of submission copies 提出部数 部 (5)は表紙なし。 ・Sample サンプル 個
	◎ Reply 回答欄 ・Number of samples for preproduction confirmation. pcs. プリプロ用確認サンプル数 個 ・Sample addressee サンプル送付先 ・Sample sending date サンプル送付日 まで ・Please reply by まで、ご回答ください ますようお願い致します。
Isuued Section 発行部署	Acoustic & Inductive Products Division

Manager	Supervisor	Engineer
IND TECH 23. AUG. 2005 H. KUWATA	IND TECH 23. AUG. 2005 MICHAEL LIM	IND TECH 23. AUG. 2005 C. H. SIM

Sincom

ISSUED ON
23 AUG 2005
PEDSG
INDUCTIVE TECH.

Approval Specifications

CUSTOMER	:	Digi Key
PART NAME	:	CHIP CHOKE COIL
CUSTOMER PART No.	:	ELL8UV[][][][]
PANASONIC PART No.	:	ELL8UV[][][][]
MODEL NAME / No.	:	
MANUFACTURED IN	:	INDONESIA

CUSTOMER'S ACKNOWLEDGEMENT

PLEASE RETURN ONE COPY

PANASONIC ELECTRONIC DEVICES SINGAPORE PTE. LTD.
No. 3 BEDOK SOUTH ROAD, SINGAPORE 469269
FAX : 62418954 TEL : 62495171

SPEC SERIAL NO.: T1S - 05013A

Approved	Checked	Prepared
IND TECH 23. AUG. 2005 H. KUWATA	IND TECH 23. AUG. 2005 MICHAEL LIM	IND TECH 23. AUG. 2005 C. H. SIM

21.05.03 (R-1)

TE-F-MP-18

1. この製品の使用材料は、「化学物質の審査及び製造等の規制に関する法律」に基き、すべて既存化学物質として記載されている材料です。

All the materials used in this product are registered material under the Law Concerning the Examination and Regulation of Manufacture, etc. of Chemical Substances.

2. 本製品は、モントリオール議定書で規制されているオゾン層破壊物質(ODC)を製造工程及び購入部品・材料で一切使用していません。

This product has not been manufactured with any ozone depleting chemical controlled under the Montreal Protocol.

3. この製品に使用している全ての材料には、臭素系特定難燃物質「PBBOs、PBBs」を含有しておりません。

All the materials used in this product contain no brominated materials of PBBOs or PBBs as the flame-retardant.

4. 納入仕様書の「有効期間」について
有効期間は、特に、申し出のない限り(お客様の要望を含み)自動更新とします。
その際、連絡書・仕様書は、発行致しません。

"The Term of Validity" of Product Specifications for Information
Unless otherwise requested (including from customer), the term of validity shall be renewed automatically.
Then , informations and specifications shall be not issued.

5. Refer to "113-TEC-001" for ERS issues

SPECIFICATION (APPEARANCE)	(R-0) 151-ELL8-019
Part Name CHIP CHOKE COIL (ELL8UV TYPE)	1 - 1

Apperrance & Dimensions (Unit:mm)

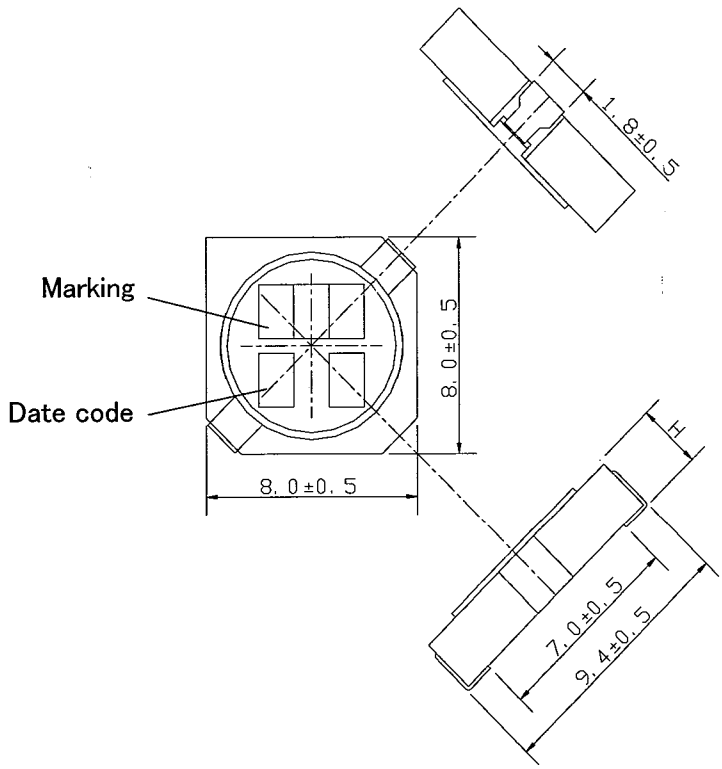

H=6.2±0.3

Recommended Land Patterns

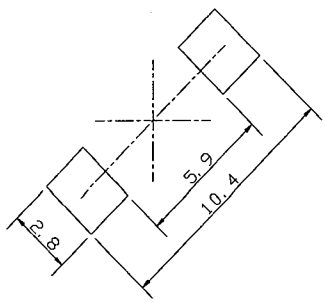

Connections (Top View)

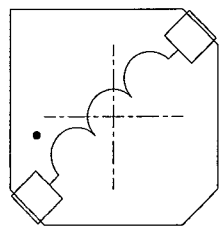

Part Number

PANASONIC'S P/N E L L 8 □ V. □□□□□

1 2 3 4

1	Height	U→6.2±0.3mm		
2	Inductance	2.7uH→2R7	22uH→220	100uH→101
3	Tolerance	M→±20%	N→±30%	
4	Customer division			

Date Aug. 22 '05	INDUCTIVE DEPARTMENT	APPROVE IND TECH 23. AUG. 2005 H. KUWATA	CHECK IND TECH 23. AUG. 2005 MICHAEL LIM	PREPARE IND TECH 22. AUG. 2005 C. H. SIM

SPECIFICATION

Part Name

CHIP CHOKE COIL (ELL8UV TYPE)

Electrical Characteristics

	CUSTOMER'S PART NUMBER	PANASONIC'S PART NUMBER	INDUCTANCE		DCR(20°C)		*RATED CURRENT [mA]	MARKING
			NOMINAL [uH]	TOL.	NOMINAL [Ω]	TOL.		
	ELL8UV1R3N	ELL8UV1R3N	1.3	±30%	7.8	±20%	5.40	1R3
	ELL8UV2R0N	ELL8UV2R0N	2.0		8.7		5.10	2R0
	ELL8UV2R7N	ELL8UV2R7N	2.7		10		4.75	2R7
	ELL8UV4R7N	ELL8UV4R7N	4.7		12		4.20	4R7
△1	ELL8UV6R2N	ELL8UV6R2N	6.2		16		3.80	6R2
	ELL8UV100M	ELL8UV100M	10	±20%	22		3.00	100
	ELL8UV150M	ELL8UV150M	15		26		2.50	150
	ELL8UV220M	ELL8UV220M	22		40		2.05	220
	ELL8UV270M	ELL8UV270M	27		53		1.80	270
△1	ELL8UV330M	ELL8UV330M	33		78		1.65	330
	ELL8UV390M	ELL8UV390M	39		90		1.50	390
	ELL8UV470M	ELL8UV470M	47		100		1.25	470
	ELL8UV680M	ELL8UV680M	68		130		1.10	680
	ELL8UV101M	ELL8UV101M	100		160		0.82	101
△1	ELL8UV221M	ELL8UV221M	220		370		0.66	221

*RATED CURRENT

This indicates the value of curret when the inductance is 70% more than nominal value and temperature rising Δt=45°C lower at D.C superposition.(at 20°C)

TEST CONDITION (INDUCTANCE)
100kHz, 0.3Vrms

SPECIFICATION

CHIP CHOKE COIL RELIABILITY CHARACTERISTICS

	ITEM	SPECIFICATION	TEST METHOD / CONDITION
	Appearance And Structure	(1) The appearance shall be no damage practically harmful. (2) Other items shell be in accordance with the appearance and the structure in the individual specification.	
	Insulation Resistance	More than 100 [MΩ].	After applying DC 100[V].
	Withstand Voltage	There shall be no abnormal.	After applying DC 100V for 60 [s]. Between core and coil.
	Operating temp. range	-40～105 [℃] (Including self - temperature rise)	
ENVIRONMENTAL CHARACTERISTICS	Moisture Life	(1)There shall not be case deformation or change in appearance. (2)There shall be no shorting or disconnection.	With rated current applied, coil shall be subjected to 90～95% [RH] at 60±2℃ for 500±8 [h]. Measurements shall be made after 1 [h] stabilization at room temperature.
	High Temp. Life	(1)There shall not be case deformation or change in appearance. (2)There shall be no shorting or disconnection.	With rated current applied, coil shall be stored at 85±2 [℃] for 500±8 [h]. Measurements shall be made after 1[h] stabilization at room temperature.
	Cold Resistance	Inductance shall not change more than ±10%	Coil shall be stored at -40±2 [℃] for 500±8 [h]. Measurements shall be made after 1 [h] stabilization at room temperature.
	Heat Resistance	Inductance shall not change more than ±10%	Coil shall be stored at 85±2 [℃] for 500±8 [h]. Measurements shall be made after 1 [h] stabilization at room temperature.
	Moisture Resistance	(1)Inductance shall not change more than ±10% (2)There shall be no abnormal in withstand voltage.	Coil shall be subjected to 95～95%RH at 60±2 [℃] for 500±8 [h]. Measurements shall be made after 1 [h] stabilization at room temperature.
	Thermal Shock	(1)There shall not be case deformation or change in appearance. (2)Inductance shall not change more than ±10%	-40±2℃ (for 0.5h)⇔ 85±2℃ (for 0.5h) 10 cycles. Measurements shall be made after 1 [h] stabilization at room temperature.
	Temp. Characteristics	Inductance shall not change more than ±15%	-25～85 [℃] Standard: Values at 20 [℃] (at Idc=0 [A])
PHYSICAL CHARACTERISTICS	Vibration Resistance	(1)There shall not be case deformation or change in appearance. (2)Inductance shall not change more than ± 10%	After vibrating at frequencies ranging from 10 to 55 [Hz] (10～55～10/min.) with amplitude for 1.5 [mm] for 2±0.1 [h] each X-Y-Z axis.
	Terminal Strength	Terminal shall not come out.	Pulling strength of terminal: 0.98 [N] { 0.1kgf } for 30 [s]
	Solderability	Solder shall be attached more than 90% around the dipped portion.	After fluxing, coil shall be dipped in a melted solder bath(M705) at 255±5[℃] for 3±0.5 [s]
	Soldering Heat Resistance	(1)There shall not be case deformation or change in appearance. (2)Inductance shall not change more than ± 10%	The coil shall be subjected to reflow soldering 2times. Measurements shall be made after 1 [h] stabilization at room temperature. Reflow soldering: Preheating:150±10 [℃], 3 [min]. Solder dipping:250±10 [℃],10±0.5 [s]

SPECIFICATION (COMMON)

(R - 1)
151-ELL8-022

CHIP CHOKE COIL (ELL8*V TYPE) PRECAUTION FOR USE OF THE COIL.

1 — 1

ITEM	CONTENTS	REMARKS
REFLOW SOLDERING	HOT BLAST REFLOW FURNACE. 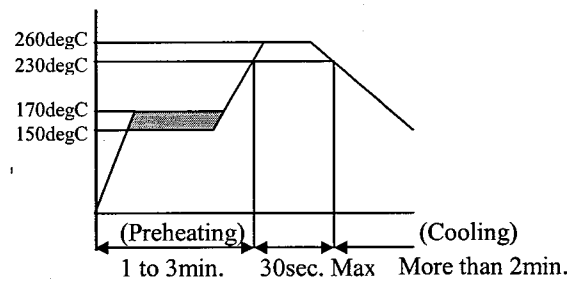 Peak Temperature : 260degC max. Time above 200degC : 80sec. Max.	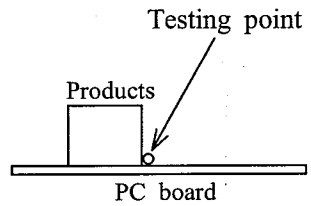 (Reflow soldering should be limited to 2times.)
WASHING OF BOARD	When the soldered PC board washed by fleon or others, you are requested to contact engineering department as for washer and washing conditions advance.	
RESOLDERING WITH A SOLDERING IRON	The temperature of the tip of the soldering iron should be 300℃ or less, 3 seconds. And resoldering with a soldering iron should be limited to 1 time, and after that should be cooling these.	
MOUNTING SIDE	External force must be less than 5.0[N] : while mounting.	
OTHERS	The customer is requested to store the products at the normal temperature (-5℃ to 35℃) and the normal humidity (85%RH max.) in the packages we supplied. The package shall not be exposed to direct sunlight and harmful gas, and care should be taken so as not cause dew.	

1. Don't make space between the coil and PC board.
2. Don't heap up the coil.
3. Be careful not to pressing force to the terminal.
4. Don't use the coil dipped on the floor.

DATE Aug. 22 '05	INDUCTIVE DEPARTMENT	

SPECIFICATION (MATERIAL)	(R-0) 151-ELL8-013
Part Name CHIP CHOKE COIL (ELL8*V TYPE)	1 - 1

Structure

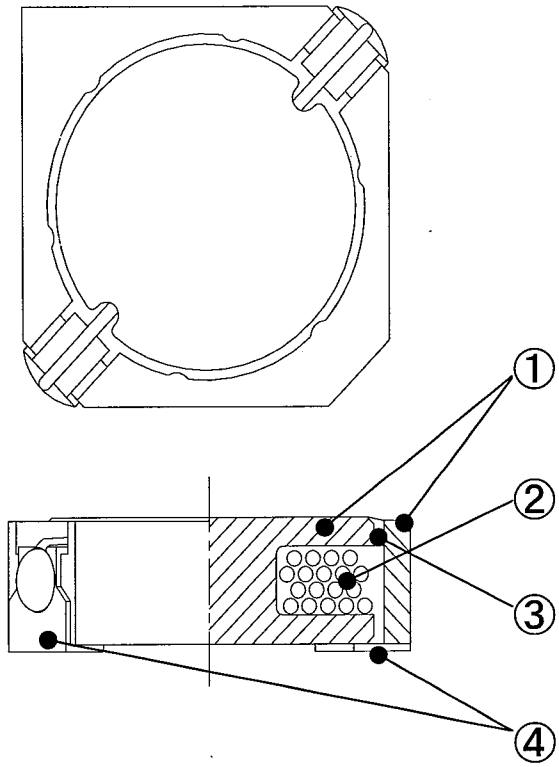

Material List

ITEM	PART NAME	MATERIALS	MANUFACTURE
1	Core	Ferrite	TDK CO.,LTD. HITACHI METALS LTD. FDK CO.,LTD. ZHEJIANG TIANTONG ELECT. CO.,LTD HUOH YOW ENTERPRISE CO.,LTD
2	Coil	Polyurethane Enameled Copper Wire	RIKEN ELECTRIC WIRE CO.,LTD. TOUTOKU ELECTRIC CO.,LTD. DAIICHI DENKO CO.,LTD. HITACHI DENNSENN LTD.
3	Adhesive	Epoxy Resin	OPTIONAL
4	Terminal	Phosphor Bronze	OPTIONAL

Date Aug. 22 '05	INDUCTIVE DEPARTMENT	APPROVE IND TECH 23. AUG. 2005 H. KUWATA	CHECK IND TECH 23. AUG. 2005 MICHAEL LIM	PREPARE IND TECH 22. AUG. 2005 C. H. SIM

Taping

(1) CARRIER TAPE DIMENSIONS.

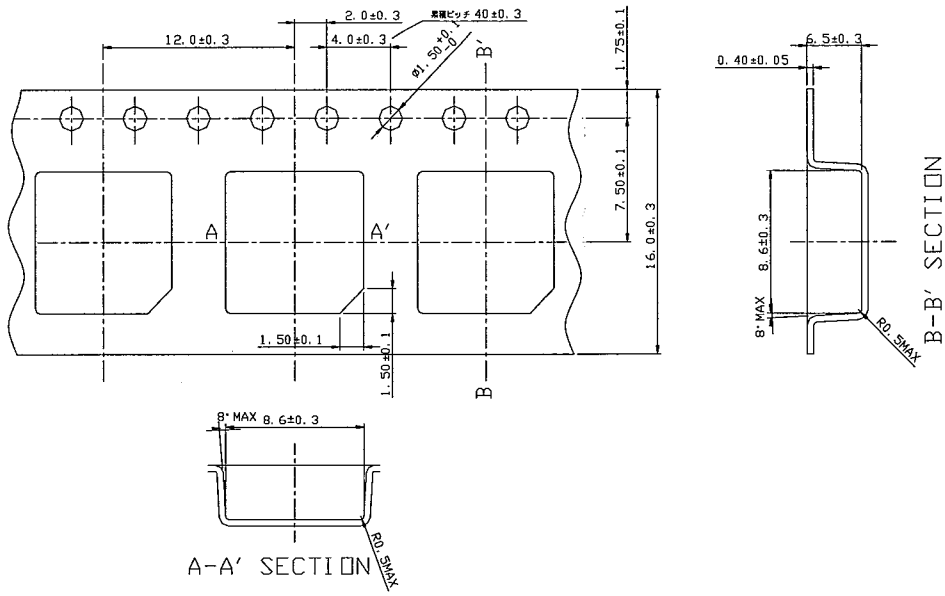

(2) COVER TAPE PEEL STRENGTH AND TEST METHOD

PEEL SPEED : 300mm/min
PEEL STRENGTH : 0.1～1.07N

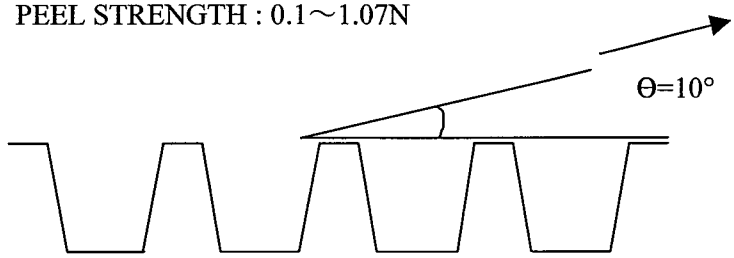

(3) PACKAGING

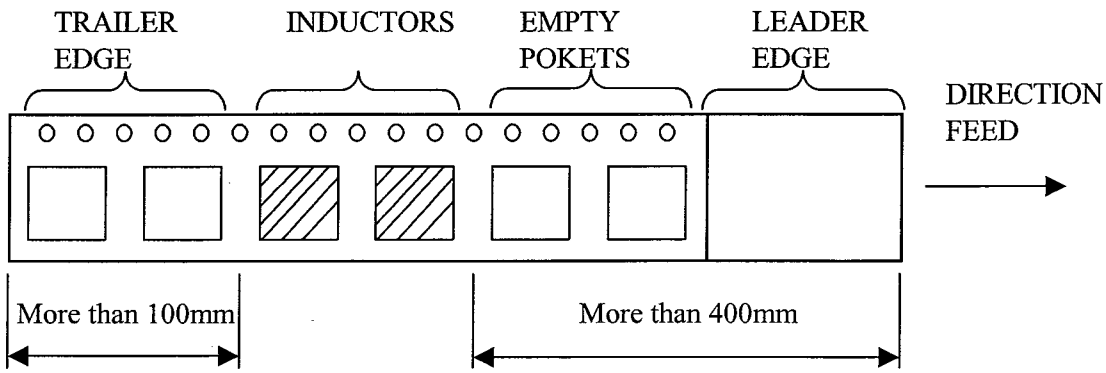

Taping

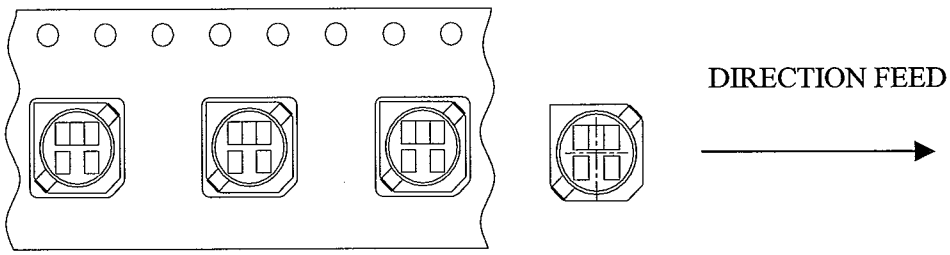

There shall not be more empty pockets than two and those pockets shall not be consecutive.

Reel Dimensions

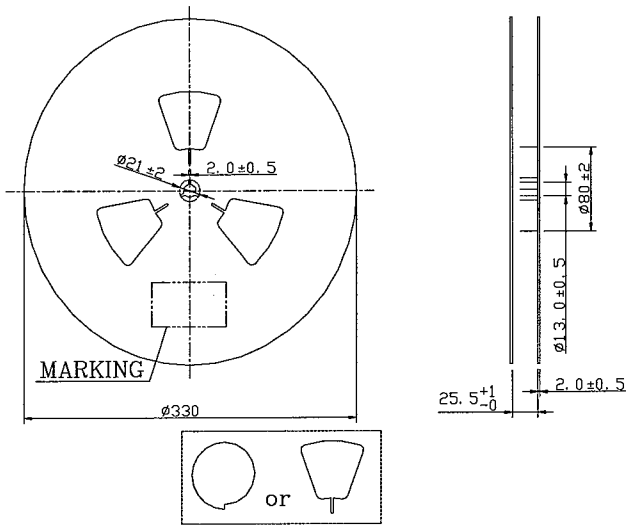

(1) QUANTITY PER REEL: 500pcs.
(2) MARKING: CUSTOMER'S P/N, OUR P/N, QUANTITY AND Lot No.

Packed Form

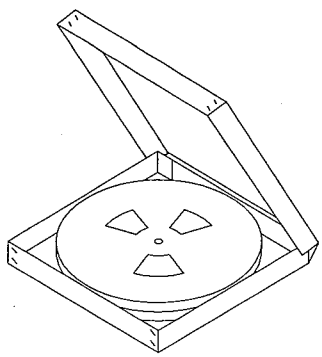

(1) MARKING: CUSTOMER'S P/N, OUR P/N, QUANTITY AND Lot No.

2reel/box