THIS DRAWING IS UNPUBLISHED. RELEASED FOR PUBLICATION -,- .
© COPYRIGHT - By - ALL RIGHTS RESERVED.

LOC	DIST
AD	39

REVISIONS

P	LTR	DESCRIPTION	DATE	DWN	APVD
	T4	REVISED PER ECO-11-004587	11MAR11	RK	HMR

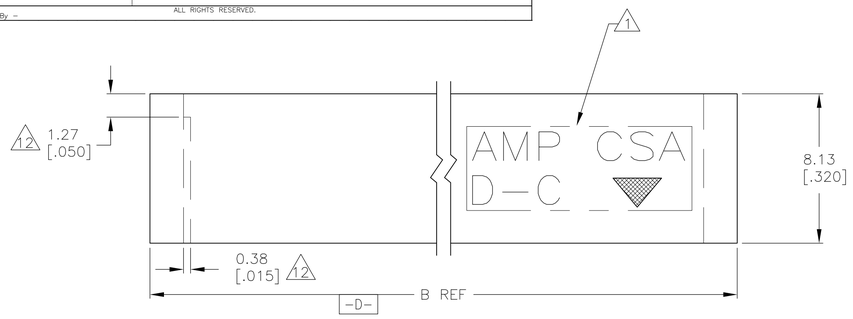

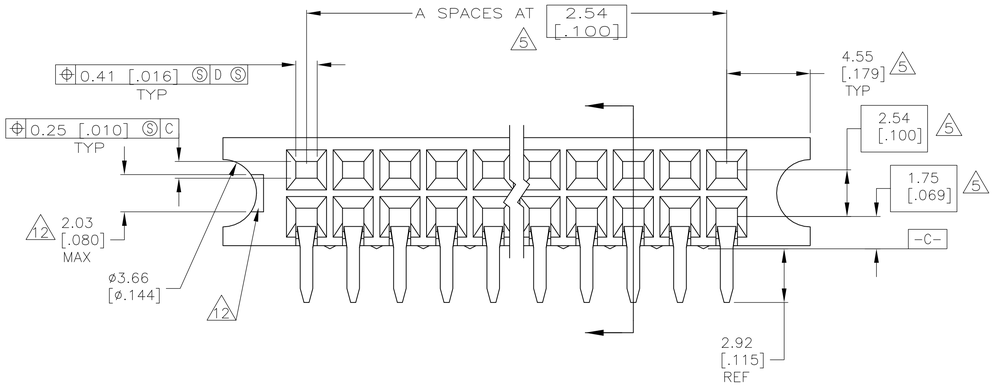

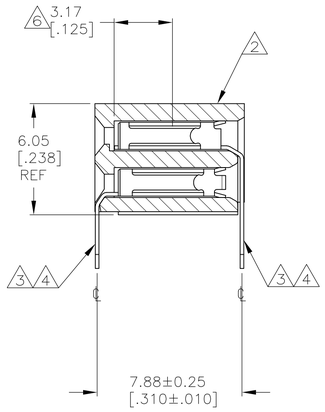

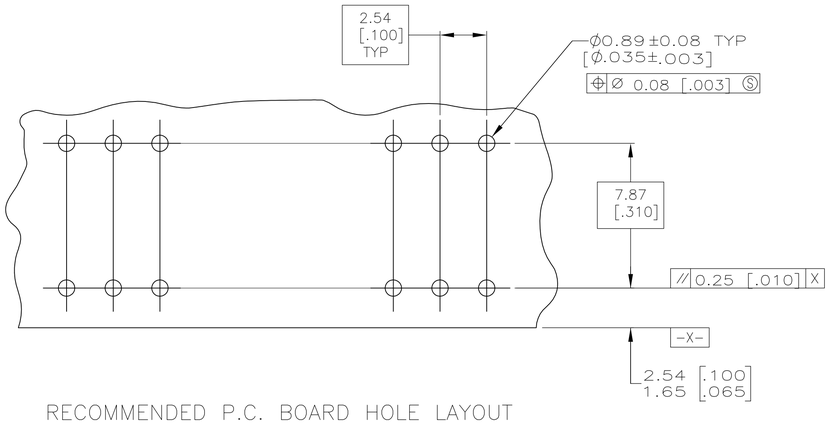

RECOMMENDED P.C. BOARD HOLE LAYOUT

1. "AMP", "CSA", " ▼ " AND "DATE CODE" WITH .062 ±.015 HIGH CHARACTERS WHERE SIZE PERMITS.
2. HOUSING: 1–70 POSITION SIZES MAY BE PPS, GLASS–FILLED OR PCT, GLASS–FILLED. POSITION SIZES GREATER THAN 70 WILL BE PPS, GLASS–FILLED.
3. CONTACT: PHOSPHOR BRONZE.
4. CONTACT FINISH: DUPLEX PLATED 0.00038 [.000015] GOLD IN CONTACT AREA, 0.00127–0.00254 [.000050–.000100] BRIGHT TIN–LEAD ON SOLDER TAILS, ALL OVER 0.00127 [.000050] NICKEL.
5. THESE DIMENSIONS PERTAIN TO CAVITY ℄'S ONLY, NOT TO CONTACT LOCATIONS.
6. POINT OF MEASUREMENT FOR PLATING THICKNESS (INSIDE CONTACT BEAMS).
7. CSA LOGO INK STAMPED WHITE ON HOUSING.
8. CONTACT FINISH: DUPLEX PLATED 0.00038[.000015] GOLD IN CONTACT AREA, 0.00127–0.00254[.000050–.000100] BRIGHT TIN ON SOLDER TAILS, ALL OVER 0.00127[.000050] NICKEL.
9. SUPERSEDED BY 5–532955–1.
10. ROHS 2002/95/EC COMPLIANT
11. CONTACT FINISH: DUPLEX PLATED 0.00038 [.000015] GOLD IN CONTACT AREA, 0.00127–0.00254 [.000050–.000100] MATTE TIN ON SOLDER TAILS, ALL OVER 0.00127 [.000050] NICKEL.
12. RECESSED AREA AROUND MOLD GATE IS OPTIONAL. THIS FEATURE IS ALLOWABLE ON EITHER SIDE OF HOUSING OR MAY NOT BE PRESENT AT ALL.
13. OBSOLETE PARTS: OBSOLETE CIS STREAMLINING PER D.RENAUD/D.SINISI

	11	19.25 [.758]	4	10	10	~~8–532955–1~~		10 9	8	21.79 [.858]	5	12	3–532955–2
	11	34.49 [1.358]	10	22	10	~~8–532955–0~~			4	19.25 [.758]	4	10	3–532955–1
13 OBSOLETE	11	47.19 [1.858]	15	32	10	~~7–532955–9~~	OBSOLETE		4	34.49 [1.358]	10	22	3–532955–0
	11	235.15 [9.258]	89	180	10	~~7–532955–8~~	13 OBSOLETE		4	47.19 [1.858]	15	32	~~2–532955–9~~
	11	209.75 [8.258]	79	160	10	~~7–532955–7~~	OBSOLETE		4	235.15 [9.258]	89	180	2–532955–8
	11	125.93 [4.958]	46	94	10	~~7–532955–6~~	OBSOLETE		4	209.75 [8.258]	79	160	2–532955–7
	11	24.33 [.958]	6	14	10	7–532955–5	OBSOLETE		4	125.93 [4.958]	46	94	2–532955–6
	11	62.43 [2.458]	21	44	10	~~7–532955–4~~			4	24.33 [.958]	6	14	2–532955–5
13 OBSOLETE	11	260.55 [10.258]	99	200	10	~~7–532955–3~~	OBSOLETE		4	62.43 [2.458]	21	44	2–532955–4
	11	194.51 [7.658]	73	148	10	~~7–532955–2~~	13 OBSOLETE		4	260.55 [10.258]	99	200	~~2–532955–3~~
	11	184.35 [7.258]	69	140	10	~~7–532955–1~~	OBSOLETE		4	194.51 [7.658]	73	148	2–532955–2
	11	171.65 [6.758]	64	130	10	~~7–532955–0~~	OBSOLETE		4	184.35 [7.258]	69	140	2–532955–1
13 OBSOLETE	11	169.11 [6.658]	63	128	10	~~6–532955–9~~	13 OBSOLETE		4	171.65 [6.758]	64	130	~~2–532955–0~~
	11	158.95 [6.258]	59	120	10	6–532955–8	OBSOLETE		4	169.11 [6.658]	63	128	1–532955–9
13 OBSOLETE	11	146.25 [5.758]	54	110	10	~~6–532955–7~~			4	158.95 [6.258]	59	120	1–532955–8
	11	133.55 [5.258]	49	100	10	6–532955–6			4	146.25 [5.758]	54	110	1–532955–7
13 OBSOLETE	11	128.47 [5.058]	47	96	10	~~6–532955–5~~			4	133.55 [5.258]	49	100	1–532955–6
13 OBSOLETE	11	120.85 [4.758]	44	90	10	~~6–532955–4~~			4	128.47 [5.058]	47	96	1–532955–5
13 OBSOLETE	11	113.23 [4.558]	42	86	10	~~6–532955–3~~	13 OBSOLETE		4	120.85 [4.758]	44	90	~~1–532955–4~~
	11	108.15 [4.258]	39	80	10	6–532955–2			4	113.23 [4.558]	42	86	1–532955–3
13 OBSOLETE	11	97.99 [3.858]	35	72	10	~~6–532955–1~~			4	108.15 [4.258]	39	80	1–532955–2
	11	95.45 [3.758]	34	70	10	6–532955–0	13 OBSOLETE		4	97.99 [3.858]	35	72	~~1–532955–1~~
	11	82.75 [3.258]	29	60	10	5–532955–9			4	95.45 [3.758]	34	70	1–532955–0
	11	70.05 [2.758]	24	50	10	5–532955–8			4	82.75 [3.258]	29	60	532955–9
	11	57.35 [2.258]	19	40	10	5–532955–7			4	70.05 [2.758]	24	50	532955–8
	11	52.27 [2.058]	17	36	10	5–532955–6			4	57.35 [2.258]	19	40	532955–7
	11	44.65 [1.758]	14	30	10	5–532955–5			4	52.27 [2.058]	17	36	532955–6
	11	37.03 [1.458]	11	24	10	5–532955–4			4	44.65 [1.758]	14	30	532955–5
	11	31.95 [1.258]	9	20	10	5–532955–3			4	37.03 [1.458]	11	24	532955–4
13 OBSOLETE	11	26.87 [1.058]	7	16	10	~~5–532955–2~~	OBSOLETE		4	31.95 [1.258]	9	20	532955–3
	11	21.79 [.858]	5	12	10	5–532955–1			4	26.87 [1.058]	7	16	532955–2
	FINISH	B	A	NO OF POSN		PART NUMBER			4	21.79 [.858]	5	12	532955–1
									FINISH	B	A	NO OF POSN	PART NUMBER

THIS DRAWING IS A CONTROLLED DOCUMENT.

DIMENSIONS: mm [INCHES]

TOLERANCES UNLESS OTHERWISE SPECIFIED:
0 PLC ± –
1 PLC ± –
2 PLC ± 0.13 [.005]
3 PLC ± –
4 PLC ± –
ANGLES ± –

MATERIAL 2 3
FINISH SEE TABLE

DWN 3/7/91 K.L.CLOUSER/UTA
CHK 05-14-91 D SARVER
APVD –
PRODUCT SPEC –
APPLICATION SPEC –
WEIGHT –

TE Connectivity

NAME RECEPTACLE ASSY, MOD II, DBL ROW, 2.54 X 2.54 [.100 X .100] CL, GUIDE PIN EARS, CLOSED ENTRY,

SIZE	CAGE CODE	DRAWING NO	RESTRICTED TO
A1	00779	C-532955	–

CUSTOMER DRAWING SCALE 6:1 SHEET 1 OF 1 REV T4

4805 (3/11)